BP ALASKA

INSTALL GPB PIG LAUNCHER & RECEIVER FACILITIES

APPRAISAL-LEVEL COST REPORT

VECO JOB NO. 125698-3903

PREPARED BY
VECO ALASKA, INC.

MARCH 12, 2003

VECO ALASKA, INC.
949 E. 36th Avenue, Suite 500
Anchorage, AK 99508
Telephone (907) 762-1500

LETTER OF TRANSMITTAL

Date	Job No.	Transmittal No.
3/14/03	125698	125698-3903-001

ATTENTION:

RE: GPB Pig Launcher/Receiver
Appraisal-Level Cost Report
VECO Job No. 125698-3903

TO
Mr. Tim K. Pine
BP O&M, CIC Projects
Anchorage, Alaska

We are sending you

☐ Shop Drawings ☐ Prints ☐ Under separate cover via _____ the following items
☐ Copy of Letter ☐ Plans ☐ Specifications
☒ Attached ☐ Samples ☒ Appraisal-Level Cost Report

Transmitted items prepared by

Copies	Date	No.	Description
6	3/12/03	n/a	Appraisal-Level Cost Report

These are transmitted as checked below:
Discipline: Squad check required.

☐ ELECT. ☐ For Approval ☐ Approved as submitted ☐ Resubmit ____ copies for approval
☐ INST. ☒ For your use ☐ Approved as noted ☐ Submit ___ copies for distribution
☐ COMM. ☐ As requested ☐ Returned for corrections ☐ Return ____ corrected prints
☐ MECH. ☐ For review & comment ☐ _____
☐ CIVIL ☐ FOR BIDS DUE _____, 19 __ PRINTS RETURNED AFTER LOAN TO US
☐ OTHER _____
☐ IFA
☐ IFC

☐ Quality Reviewed N/A
QA Signature Date

☐ Issue for Review

Remarks: This study report completes our currently authorized scope, but please let me know if there are questions. We are looking forward to assisting you further on this project development.

Copy w/attachments: 125698-3903 Project File; J. Diamond, VAB 4; R. Wedge, VAB 6
Copy w/o attachments: E. Helzer, VAB 4; D. Lodoen, VAB 5

Signed: Rodney F. Wedge
Name: Rodney F. Wedge, P.E.
Title: VECO Sr. Proj. Engr.

Summary

This short-duration cost study was undertaken at BP, GPB CIC, request to provide rough order of magnitude (ROM) cost information on three options for pipeline pigging facilities proposed to be added to the Eastern Operating Area at Prudhoe Bay. Since the level of detail required and the schedule did not permit gathering and evaluation of site information, the ROM costs presented depend upon a number of assumptions. Although the options presented here may not fit case by case requirements, the intent is that this information is to provide enough detail to facilitate discussions and decisions about project approach and budget initiation for conceptual and preliminary engineering.

Option 1 would provide permanently installed, indoor pigging facilities in new modules at each of 142 sites, or 71 pipelines. The ROM total installed cost (TIC) for Options 1 is approximately $643 million.

Option 2 assumes that all 71 pipelines can be served by portable, skid-mounted pigging facilities that would be hauled on site and connected to permanently-installed valves on the operating lines. Option 2 considerably reduces the number of separate pig launcher/receiver skids necessary. Twenty eight launcher/receiver skids are assumed. The ROM TIC for Option 2 is approximately $180 million. This estimate includes an allowance for dedicated support equipment for the pigging crew(s).

Option 3 is similar to Option 2 except that launcher and receiver facilities would be "stick-built" on site from a set of prefabricated, pre-tested spools erected as needed on temporary supports. An allowance for support equipment is included. Option 3 ROM TIC is approximately $164 million.

Budgeting for formal conceptual and preliminary engineering development is also addressed at the ROM level. Scope development for conceptual engineering has not yet been undertaken. Consequently, a factored allowance has been assumed based on the premise that the project may look like Option 2 in complexity and cost. Allowing that a formal conceptual phase could require up to half the effort of the preliminary engineering, and taking into account the number of sites and special situations that may ultimately be addressed, 9% of TIC may be necessary for conceptual and preliminary engineering combined.

The project that evolves from this will, no doubt, look quite different than any of the three options presented here. However, the intent is that this report will provide enough background information to move to the next step of project definition.

Introduction

Purpose

GBP CIC has developed a list of seventy-one field pipelines that it has prioritized for installation of launcher and receiver facilities for smart pigging. GPB WOA already has some permanent launcher and receiver facilities in place that were installed in the early 1990s. BP wishes to make high-level comparisons of costs associated with installation of additional facilities/equipment and make appraisal-level and programming decisions about how to develop and budget for the project. A project description and facilities scope will be initiated by BP through its decisions and further defined during subsequent formal conceptual and preliminary engineering development.

Engineering Authorization & Schedule

This study was prepared under Work Order No. 333100421-01, AFE PBC PRJ 000 and "Scope of Work, Project Appraisal Engineering Support," Revision 1, dated March 4, 2003. Initial assessment of the scope of this support effort was done under a Revision 0 scope, dated February 25, 2003. It quickly became evident that the precision of the estimates needed at this time, the budget available and the schedule did not permit a complete engineering scope, schedule and budget development for a subsequent conceptual engineering effort. The agreed deadline for this report was set at March 12, 2003, with the understanding that programming decisions would be necessary before going further.

Scope & General Premise

This report is the deliverable document under a VECO Alaska Inc. engineering support scope to assist BPXA with this project development effort. VECO engineering scope is summarized below.

VECO is providing BP with project appraisal-level support in the form of rough order of magnitude (ROM) cost estimates for AFE development for future installation of GPB Pig Launcher and Receiver Facilities. Work under VECO's scope supports preparation by BP of a revised AFE submittal to cover formal conceptual and preliminary engineering on this project.

VECO prepared the following rough order of magnitude (ROM) estimates for BP.

A. Total installed cost (TIC) ROM level (+/-50% precision) cost estimates for the following options:

   1. Option 1: Permanently installed, indoor pig launcher/receiver facilities on each of 71 pipelines on CIC's priority list (estimates prepared based on a rough cost per square foot or "cubage" basis as drawn from recent similar projects). BP support was utilized for access to historical cost data for adjustment by VECO.

   2. Option 2: "Portable" (modularized) launcher/receiver equipment capable of being moved to each location as needed and set up from relatively complete system assemblies supported by the other necessary equipment. For this option, it was assumed that equipment would be fabricated into "truck-able" skids for ready movement.

   3. Option 3: "Temporary" (component-assembled) launcher/receiver equipment consisting of pre-fabricated pipe spools and supporting equipment that would be fitted up on site from relatively small individual components (not prefabricated skids, per se).

B. Approximate cost for formal conceptual and preliminary engineering phases (generally +/-50% precision). This estimate was arrived at using historical data on similar projects. No project specific estimates of engineering effort have yet been made. For this estimate, VECO assumed that the portable (modularized) option, Option 2, is most likely to be selected for project development. No project specific task breakdown was attempted at this time.

C. VECO was to document the above with a brief letter-style report (this document) containing an appendix of worksheets, sketches backup data and other necessary supporting information.

Study Team

Mr. Tim K. Pine was the BPXA lead for initiation of this effort. VECO's estimator on this effort was Mr. James E. Diamond. Rodney F. Wedge, P.E., VECO Senior Project Engineer, assisted the estimating with information gathering and prepared this report.

TIC Alternatives Considered

Option 1: Permanent, Indoor Facilities

Equipment Description

Option 1 assumes that the pig launcher and receiver facilities are provided in a dedicated module that is equipped with ventilation, gas detection and fire protection systems suitable for safe, indoor pigging operation. A more detailed discussion of the basic components assumed for each installation is included Appendix 2. Please also refer to Sketch SK-3-5-03, also in Appendix 2.

Assumptions

1. There has been no effort to set design criteria at this level of assessment.
2. In the absence of time to develop site-specific data, it was generally assumed for simplicity that each line already has a dropout spool suitable for tie-in of the new launcher/receiver equipment.
3. Similarly, it is assumed that each site already has adequate space and access for addition of pig launcher/receiver facilities.
4. Also, it is assumed that all lines are already designed and constructed to permit passage of the in-line inspection (ILI) equipment intended for use. No allowances have been made for modification of lines to remove bends with too-short radii or to modify tees that may not already have "pig bars" in place. Obviously, all lines need to be checked and walked down once ILI equipment criteria are set.
5. Since it was not possible to collect site-specific information and differentiate requirements based on frequency of operation, etc., it was assumed that all sites (142 separate locations) receive a similar modularized facility. The possibility that new facilities may possibly be installed in existing buildings has not been considered.
6. Nominal pipe size and pressure rating requirements were deduced from pipe size and maximum allowable operating pressure (MAOP) data provided within the electronic copy of the CIC Pipeline Priority List. A hard copy of the original list is included as Appendix 1. A similar, modified listing indicating the nominal pipe size and ANSI/ASME Pressure Class assumed for estimating purposes is included as Appendix 3.
7. Isolation from operating lines is assumed to require double valves with a bleed between.
8. Valve operation for launching and receiving pigs is assumed to be manual.
9. No remote monitoring/indication/control systems are included.
10. It is generally assumed that permanent modules do not have fixed drain and sump systems, but no allowance was included for support equipment. For Option 1, it was assumed that support equipment is accounted for by the facility operating and maintenance budget.
11. It is assumed that components and equipment (valves, launcher barrel doors, etc.) are readily available in all size and pressure class combinations. This is a simplifying assumption that is probably not true at least in the case of Class 2500 launcher/receiver assemblies. This is an issue that requires further scrutiny during conceptual development.

BPXA-CEC00010721

ROM Cost Estimate

The rough order of magnitude (ROM) total installed cost (TIC) of Option 1 is $643,473,000. This figure assumes a 25% contingency. Since no project schedule has been set, this estimate does not include forward escalation.

Option 2: Portable Facilities

Equipment Description

The most significant difference between Option 1 and Option 2 is the assumption that the pig launcher/receiver and appurtenant components would be skid-mounted and portable on a trailer or "low-boy." Also under Option 2, no enclosure module would be provided, and the ventilation and safety systems necessary for indoor operation would not be necessary. However, implementation of Option 2 would require addition of site-specific, permanent supports or drive-in ramps to permit expedited set-up and tie-in of the skid equipment. Since no site surveys have yet been conducted, this evaluation assumes these site-specific costs are analogous to costs for similar outdoor, permanent launcher/receiver platforms. Designing for portability dramatically reduces the number of skids necessary for equipment to serve all locations.

A more detailed discussion of the basic components assumed for each installation is included in Appendix 2. Please also refer to Sketch SK-3-5-03, also in Appendix 2.

Assumptions

Assumptions for Option 2 differ from Option 1 principally to facilitate servicing all lines with a minimum of equipment. Except for permanent valves, all equipment is to be skid-mounted to the maximum extent possible.

1. As with Option 1, no differentiation regarding site-specific requirements has been made except with respect to the distribution of the size and pressure class of the equipment required to service all the listed lines. A table showing the size and pressure class breakdown is included as Appendix 4.

2. It was assumed that flanged adapter fittings would be utilized on high-pressure launcher/receiver barrels to permit their use on lower pressure lines of the same size. That is, it was assumed that a standard ANSI/ASME Class 1500 launcher/receiver would be used with adapter spools on Class 600 lines. This reduces the number of different launcher/receiver sets required. (However, note that Class 2500 launchers/receivers may not actually be available as standard equipment. This distinction was not considered in the estimates. See Appendix 4 for the two cases where an alternative to Class 2500 equipment may need to be considered.)

3. One permanent valve is assumed to be installed at each end of each line for the connection of the pig launcher/receiver barrel skids, and another permanent valve is assumed for connection of the "kicker line" necessary to permit use of service fluid during pig launch/receipt. As with Option 1, a third permanent valve is necessary on the mainline bypass of the launcher/receiver site.

4. It is assumed that the permanent valves for connection of the launcher/receiver skids are also equipped with a flanged spool including a device, such as a completion plug or "Lock-o-ring" plug. Such an arrangement would permit installation of the second, temporary valve before removal of the plug, using a hot tap machine. This would facilitate maintaining a double block and bleed between the portable equipment and the in-service line. Other similar,

BPXA-CEC00010722

perhaps less expensive, arrangements are possible and should be investigated during conceptual engineering.

ROM Cost Estimate

The rough order of magnitude (ROM) total installed cost (TIC) of Option 2 is $179,582,000. Option 2 TIC estimate includes a 25% contingency and an allowance for dedicated support equipment ("rolling stock") for the pigging crew(s). No forward escalation was included because the project schedule is yet to be set.

Option 3: Temporary Equipment

Equipment Description

Option 3 assumes that temporary pigging facilities are set up when needed using flanged, pre-tested spools. Although small skids may be necessary to transport the launcher/receiver barrels, it is assumed that a minimum of appurtenant equipment is installed and pre-assembled as part of the launcher/receiver skid. More importantly, it is assumed that site-specific, permanent supports or ramps are not available when setup begins. Temporary supports would need to be placed to accept the site-assembled flanged spools as well as the launcher/receiver assemblies. Timbers or some simple bolt-up steel support components would be utilized during site setup. Option 3 would entail significantly more on-site labor than Option 2 each time the crew was to prepare for a pigging operation. It is assumed that the inventory of components would be stored and transported according to size and rating and hauled to the site completely disassembled.

A more detailed discussion of the basic components assumed for each installation is included in Appendix 2. Please also refer to Sketch SK-3-5-03, also in Appendix 2.

Assumptions

1. The assumptions regarding permanent versus temporary valve placement at each location are the same as under Option 2.
2. Although BP does apparently have some existing launcher/receiver assemblies in storage on the North Slope that may fill some size/pressure class requirements, no attempt has yet been made to reduce ROM estimate take-off quantities to account for the possible suitability of those components. This needs further assessment during conceptual or preliminary engineering.

ROM Cost Estimate

The rough order of magnitude (ROM) total installed cost (TIC) of Option 3 is $163,894,000. A 25% contingency is included, but no forward escalation was included.

Approximate Conceptual and Preliminary Engineering Cost

Basis of Budget Estimate

Estimating the time and effort necessary to develop an appropriate level of detail during project conceptual and preliminary engineering phases is highly project dependent. Not every project begins with the same level of scope definition, amount of readily available technical information and operational decisions already in place. Typically, each project evolves somewhat as

engineering work begins and additional issues are clarified. Many projects done in the past did not have a definable conceptual phase, and the dividing lines between what is suitable detail development in conceptual versus preliminary versus the start of detailed design are subject to wide ranging interpretation.

In this case, the schedule and available project background information simply did not permit time for a "grassroots" development of conceptual and preliminary engineering plans and budgets. In order to provide a basis for funding these project phases, it was agreed that we would rely on a factored estimate based on historical experience and the assumption that Option 2, or some form of it, would be the most likely scenario for further development. This approach has some inherent difficulties. It does not account for the level of field "as-found" effort necessary, it does not consider the amount of engineering input necessary to facilitate scope decisions, and it does not permit discipline engineering input before the program-level budget decision is taken. Perhaps just as important is the inherent uncertainty of adapting historic data factors to this particular case. The veracity of the historic factors themselves is subject to large variation since few projects are alike in the level of effort necessary in each particular phase. Development of project specific scopes, schedules and budgets before each phase kicks off is still the recommended approach.

Historically, the cost of all preliminary engineering and detailed design services for major industrial projects comes to 15 – 20% of total installed project cost. This figure is highly dependent upon the level of engineering support necessary for site investigations and post design services. BPXA projects involving revamp and "stick built" facilities have generally fallen at the two ends of this range. Data on typical breakdown of engineering costs by project phase are much less certain. Large industrial projects may require somewhat less engineering when major project cost elements or "big-ticket" items represent a large fraction of the total project cost. This project may differ from the norm in that more up-front as-found/as-built information gathering and alternatives assessment work may be necessary.

General experience shows that a thorough conceptual and preliminary development can lead to lower final design costs (fewer direction changes and less potential for "scope creep"). Furthermore, it is advisable to err to the high side of the range because engineering tasks accomplished in preliminary engineering contribute to better detail development, and excess budget may still be utilized to support detail engineering.

Some historical data suggest that detailed design may require approximately 50% more effort on average than preliminary engineering, but data on formal conceptual engineering, as compared to the other phases, is lacking. Costs for revamp work for North Slope projects has indicated that preliminary engineering may run to about 6% of TIC and detailed design to about 9%. That would place engineering cost at the lower end of the 15-20% range mentioned above. Assuming that a solid conceptual phase on a project that needs a good deal of definition may cost half the effort of preliminary development, it seems plausible that thorough conceptual and preliminary engineering effort could require as much as 9% of TIC.

The conceptual/preliminary engineering allowance included in the Option 2 estimate comes to approximately 9% of adjusted total material and construction cost. Option 2 total material and construction cost, as presented in Appendix 7, includes an allowance for pigging crew support equipment ("rolling stock" and tools). Since the equipment accounted for by the allowance involves no engineering input, the construction cost was adjusted before calculation of the conceptual/preliminary engineering allowance of $9,825,000. This figure comes to approximately 5.5% of the Option 2 TIC.

Conceptual Engineering Tasks

What constitutes conceptual engineering for a BPXA Project is well defined by Attachment 2, "Engineering Authorization Checklist," part of VECO's "Engineering Authorization Standards and Procedures," PP-EST-0002, Revision 0, February 21, 2003. A copy of this document is included as Appendix 5 for quick reference.

Discipline engineering effort and client input as to project definition are necessary to establish the scope schedule and budget for conceptual development. An important output of the conceptual phase is the agreed scope schedule and budget for preliminary engineering.

Preliminary Engineering Tasks

Please also refer to Appendix 5 and Attachment 2, "Engineering Authorization Checklist," part of VECO's "Engineering Authorization Standards and Procedures," PP-EST-0002, Revision 0, February 21, 2003, for a full description of typical preliminary engineering tasks. Again, a critical output of the preliminary engineering phase is the approved scope, schedule and budget for detailed design, post design services and engineering support to project closeout.

Additional Technical Development Suggestions

A number of operational requirements and project development decisions will influence how this project is programmed for further definition. Some technical issues needing development have already come to light. These include the following:

1. In-line inspection tool criteria needs to be assembled and approved for design. Because this affects launcher/receiver barrel length, skid length, and site clear-space requirements, this should be done at conceptual development or very early in preliminary engineering to augment space and layout considerations at each site.
2. Operational assessment of which lines will need to be pigged, for what purpose and how often is necessary to decisions about what equipment is appropriate (permanent versus portable versus temporary, etc.).
3. All pipelines need to be checked for features that will not permit in-line inspection (ILI) tool passage, and the lines need to be walked down to verify that all existing components have been evaluated.
4. If some lines could economically be in-line-inspected while out of service, or with a production loss, this will certainly impact the type of equipment necessary. For example, standard pressure class pigging equipment might possibly be used instead of full line-class rated equipment.
5. Pig launcher and receiver barrel assemblies are not generally available for operating pressures above ANSI/ASME Class 1500. If dedicated equipment for ANSI/ASME Class 2500 is necessary, this equipment may need to be custom-designed and vendor qualified. If there are safe, workable alternatives to use of Class 2500 equipment, they should be identified early in project development.
6. Decisions are necessary about what support equipment is needed. If there is a dedicated EOA pigging crew, what trucks, trailers, vacuum trucks, special tools, etc., are necessary?
7. Development of a design philosophy regarding permanent valves is needed. Where are permanent valves desirable for launcher/receiver hookup? What level of isolation is

deemed acceptable at various points in the operation, etc.? What is the most efficient, safe method to provide the necessary isolation from in-service fluids during hook-up?

8. A thorough survey of existing, pig launcher and receiver equipment is necessary to make decisions about what can be utilized on a shared basis field wide.
9. Pigging crew staffing and workload decisions may impact the selection of appropriate equipment and project focus. This needs to be a consideration in project definition.
10. Develop a firm engineering scope, schedule and budget as soon as possible after project scope definition.

Appendices

BPXA-CEC00010727

Appendices

1. *CIC Pipeline Priority List (Reformatted)*
2. *Sketch SK-3-5-03 and descriptions of typical components by option*
3. *Assumed Size/Pressure Class Listing*
4. *Takeoffs by Size/Class/Option*
5. *Attachment 2 Engineering Authorization Checklist & Flowchart*
6. *Option 1 Cost Estimate and Basis*
7. *Option 2 Cost Estimate and Basis*
8. *Option 3 Cost Estimate and Basis*
9. *Vendor Data*
10. *Other Related Communications*

1

CIC Pipeline Priority List
(Reformatted)

Received 2/21/03

Equip ID	Equip Type	Size	Serv	mBeta % Wall Loss	mAlpha Rate mpy	~Remaining WT	~% Wall T	MAOP	~Corrosion Depth	Est. Year of Replacement 2002	Priority
16C/17C	CL	24	PRF	0.3185	0.2559	26%	32%	1296	12%	2050+	1
PTMCLS01	CL	24	PRF	0.2657	1.0000	28%	27%	1364	10%	2050+	1
16C	CL	24	PRF	0.2500	0.2697	21%	25%	1032	7%	2050+	1
09A	CL	24	PRF	0.2357	0.3207	29%	24%	1402	9%	2050+	1
04C	CL	24	PRF	0.2354	0.1418	21%	24%	1046	7%	2049	1
12C	CL	24	PRF	0.2307	0.8438	22%	23%	1050	6%	2048	1
16D	CL	16	PRF	0.2039	0.2822	25%	20%	1785	6%	2050+	1
14B/14C	CL	24	PRF	0.2037	0.5843	22%	20%	1076	6%	2050+	1
06C/13B	CL	24	PRF	0.2015	0.0382	22%	20%	1078	6%	2050+	1
06C	CL	24	PRF	0.2000	0.0000	22%	20%	1080	6%	2050+	1
09B	CL	16	PRF	0.1909	0.2229	51%	19%	3211	12%	2050+	1
17D	CL	16	PRF	0.1899	0.1887	25%	19%	1807	6%	2050+	1
01C	CL	20	PRF	0.1880	0.7952	30%	19%	1750	7%	2050+	1
12B	CL	16	PRF	0.1840	0.0000	28%	18%	1765	6%	2050+	1
17C	CL	24	PRF	0.1797	0.0700	23%	18%	1099	5%	2050+	1
03D	CL	16	PRF	0.1775	0.0000	28%	18%	1775	6%	2050+	1
14D	CL	12.75	PRF	0.1707	0.0121	34%	17%	2643	7%	2050+	1
07B	CL	12.75	PRF	0.1697	0.0000	34%	17%	2645	7%	2050+	1
02D	CL	12.75	PRF	0.1690	0.0000	34%	17%	2647	7%	2050+	1
11A	CL	24	PRF	0.1667	0.0000	21%	17%	988	4%	2050+	1
06B	CL	12.75	PRF	0.1625	0.0000	34%	16%	2661	7%	2050+	1
13B	CL	24	PRF	0.1621	0.0000	24%	16%	1116	5%	2050+	1
07D	CL	12.75	PRF	0.1614	0.0000	34%	16%	2664	7%	2050+	1
13D	CL	12.75	PRF	0.1593	0.0815	34%	16%	2669	6%	2050+	1
04D	CL	12.75	PRF	0.1550	1.5789	34%	16%	2679	6%	2050+	1
11D	CL	16	PRF	0.1545	0.4049	26%	15%	1864	5%	2050+	1
02B	CL	12.75	PRF	0.1538	0.0000	34%	15%	2681	6%	2050+	1
PTMCLS0102	CL	24	PRF	0.1390	0.3261	32%	14%	1521	5%	2050+	1
06D	CL	12.75	PRF	0.1379	0.0000	35%	14%	2718	6%	2050+	2
02D/05E	CL	12.75	PRF	0.1333	0.2632	35%	13%	2728	5%	2050+	2

BPXA-CEC00010730

CIC Pipeline Priority List
(Reformatted)

Received 2/21/03

11B	CL	12.75	PRF	0.1174	0.7143	33%	12%	2899	4%	2050+	2
01B	CL	12.75	PRF	0.1111	0.1042	36%	11%	2778	5%	2050+	2
TLGC3/FS3	FL	24	OIL	0.1053	0.8289	89%	11%	4197	11%	2050+	2
18D	CL	16	PRF	0.1043	0.0000	28%	10%	1943	3%	2050+	2
15B	CL	12.75	PRF	0.1041	0.0000	34%	10%	2931	4%	2050+	2
01D	CL	16	PRF	0.1000	0.0000	31%	10%	1894	3%	2050+	2
04B	CL	12.75	PRF	0.1000	0.0000	37%	10%	2803	4%	2050+	2
05B	CL	12.75	PRF	0.1000	0.0000	37%	10%	2803	4%	2050+	2
09E	CL	24	PRF	0.0149	0.3875	37%	2%	1670	1%	2050+	3
FS3/TIE-30	CL	30	OIL	0.0133	0.0000	34%	1%	1145	0%	2050+	2
15D	CL	16	PRF	0.0127	0.0000	31%	1%	2086	0%	2050+	3
05E	CL	8.625	PRF	0.0109	0.1724	43%	1%	4786	0%	2050+	3
18B	CL	12.75	PRF	0.0106	0.0000	37%	1%	3151	0%	2050+	3
FS1/ALPS-34	CL	34	OIL	0.0100	0.0000	34%	1%	1013	0%	2050+	2
07C/15C	CL	24	PRF	0.0086	0.0000	28%	1%	1257	0%	2050+	3
02C	CL	24	PRF	0.0083	0.0000	28%	1%	1257	0%	2050+	3
07C	CL	24	PRF	0.0075	0.0000	28%	1%	1258	0%	2050+	3
LS02	CL	14	PRF	0.0070	0.0000	28%	1%	2156	0%	2050+	3
15C	CL	24	PRF	0.0070	0.0000	28%	1%	1258	0%	2050+	3
FS2/FS1OIL	CL	30	OIL	0.0054	0.0000	34%	1%	1151	0%	2050+	2
05D	CL	12.75	PRF	0.0053	0.0000	40%	1%	3014	0%	2050+	3
03A	CL	24	PRF	0.0043	0.0000	34%	0%	1543	0%	2050+	3
06E	CL	12.75	PRF	0.0027	0.0000	37%	0%	3170	0%	2050+	3
LS04/05	CL	24	PRF	0.0022	0.0000	37%	0%	1685	0%	2050+	3
LPC OIL SALES	CL	16	PRF	0.0017	0.0000	34%	0%	2305	0%	2050+	2
LS05	CL	18	PRF	0.0015	0.0000	31%	0%	1870	0%	2050+	3
LS03	CL	18	PRF	0.0014	0.0000	31%	0%	1870	0%	2050+	3
02E	CL	16	PRF	0.0009	0.0000	37%	0%	2529	0%	2050+	3
LS04	CL	18	PRF	0.0007	0.0000	31%	0%	1871	0%	2050+	3
TLFS1/FS3	CL	24	PRF	0.0000	0.0000	50%	0%	2250	0%	2050+	2
PTMC02	CL	24	OIL	0.0000	0.0000	37%	0%	1687	0%	2050+	3
PTMC	CL	24	PRF	0.0000	0.0000	25%	0%	1125	0%	2050+	3
03C	CL	24	PRF	0.0000	0.0000	28%	0%	1264	0%	2050+	3
CLNK	CL	18	PRF	0.0000	0.0000	31%	0%	1872	0%	2050+	3
LS01	CL	12.75	PRF	0.0000	0.0000	28%	0%	2346	0%	2050+	3
NPWB-12	CL	12.75	OIL	0.0000	0.0000	75%	0%	5251	0%	2050+	3

BPXA-CEC00010731

Received 2/21/03

01-AL	CL	12.75	GAS	0.0000	0.0000	41%	0%	3026	0%	2050+	3
03-AL	CL	12.75	GAS	0.0000	0.0000	41%	0%	3026	0%	2050+	3
09-AL	CL	12.75	GAS	0.0000	0.0000	41%	0%	3026	0%	2050+	3
LS02THE	CL	8.625	PRF	0.0000	0.0000	50%	0%	6260	0%	2050+	3
LS02THW	CL	8.625	PRF	0.0000	0.0000	50%	0%	6260	0%	2050+	3

Phase 1 are pipelines that we want to smart pig and maintain first.
Priority 2 The damage rate is not as high as phase 1. Bata rate .138 or less and possibly DOT lines which require some type of comprehensive inspection program.
Priority 3 Has a beta factor of less than .015 and other factors

2

VECO Alaska, Inc.

BY RFW DATE 3/5/03 PROJECT GPB PIG L/R FACIL. SHEET NO. 1 OF

CHKD. — DATE TYPICAL COMPONENTS JOB NO. 125698-3903

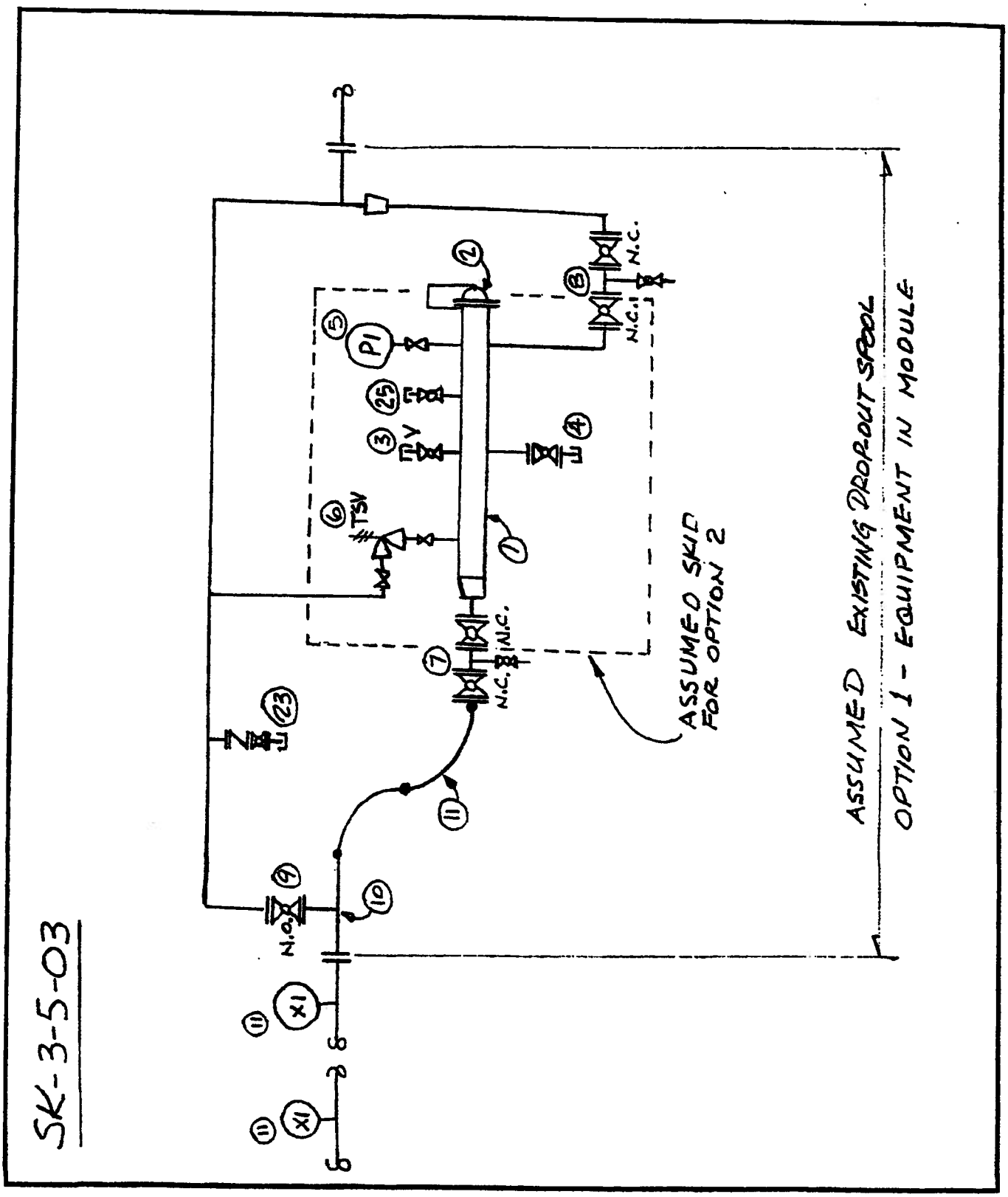

BPXA-CEC00010734

OPTION 1 - Typical Components
Permanently Installed, Indoor Pig Handling Facility

Note: A pig launcher and a receiver are similar expect for the arrangement of the "kicker" line on the pig barrel, the position of pig signals and the internal rack or tray necessary to preposition or catch the pig to prevent pig damage/line plugging.

Refer to Sketch SK-3-5-03.

Option 1 assumes that the pig launcher and receiver facilities are provided in a dedicated module that is equipped with ventilation, gas detection and fire protection systems suitable for safe, indoor pigging operation. The following basic components were assumed included.

1. Pig barrel – generally two nominal pipe sizes larger than the line pipe
2. Pig barrel quick-opening cover with supporting davit - rating to match line pipe maximum design pressure application
3. Pig barrel vent, 1-inch minimum
4. Pig barrel drain, 2-inch or larger – (note that catchment and spill handling equipment are required)
5. Pressure indicator – Note that other means of assuring the barrel is completely de-pressurized before opening may be considered necessary. Automatic interlock devices can be provided to prevent opening of the barrel cover with pressure inside. These devices are not specifically considered by this evaluation.
6. Thermal relief valve – necessary on permanent facilities left packed with liquid
7. Pig barrel line isolation valves – note that BP generally requires two valves to provide double block and bleed due to hazards of high-pressure production fluids. These valves must be *full-bore, through-conduit* pipeline valves. Manual operation is assumed.
8. "Kicker line" isolation valves – generally one or two nominal pipe sizes smaller than the line pipe. Again, twin valves and double block and bleed are generally required by BP. Manual operation is assumed.
9. Main line bypass valve – same size and rating as line pipe, but does not need to be a through-conduit type valve. Manual operation is assumed.
10. "Barred tee" – Tees where pig passage is required must have internal, longitudinally-aligned bars on the branch line to prevent the pig from lodging in the branch line during transit.
11. Factory sweep bends – radii to suit pig equipment requirements (generally 3 – 6 diameters of the line pipe).
12. Pig signals – For launching, one signal device is required downstream of the pig barrel line isolation valves to assure the pig has been launched. For receiving, a signal device is necessary as close to the barrel as possible to confirm that the pig has entered the barrel. Operational preferences may dictate a second pig signal some distance away on the main line to provide notice of pig approach or confirmation that the pig has moved well down the line.
13. Pig trays – One type may be wheel-equipped to facilitate moving the pig into position or to receive the pig when it is pulled out of the barrel. Another type of tray will be

BPXA-CEC00010735

necessary for positioning the pig within the barrel on launching. A third type of tray or rack is necessary to catch an incoming pig and prevent it from becoming lodged in the "kicker line." Generally, specialized trays and wheel equipped carriers for inspection tools are provided by the in-line inspection (ILI) contractor.

14. Spill catchment system (assume movable pans suitable for emptying with vacuum truck hose or small utility pump) to safely collect drips and spills while the pig barrel is opened or being vented or drained. It is assumed that permanent modules are not equipped with fixed sump systems and permanent sump pumps.
15. Housing module with lighting and utility power availability
16. Trolley crane system for handling pigs, etc.
17. Heat/ventilation system
18. Gas detection system
19. Fire protection system
20. Air-operated "tugger" or manually operated "come-along."
21. Compressed air supply (assume portable unit) may be necessary to power "tugger" equipment necessary to move and/or withdraw the pig and to power air-driven utility pump(s) and power hand tools.
22. Assume one vacuum truck/tanker will be necessary to collect and haul collected fluids.
23. Assume an air-driven, piston or high-pressure diaphragm actuated pump is utilized to transfer fluids from the pig barrel to the main line and for general cleanup.
24. Pump-off connection (optional) – could be utilized to reduce fluid transport requirements.
25. An auxiliary nozzle may be necessary on the pig barrel for a gas connection if natural gas or nitrogen is used to launch and/or drive the pig or inspection tool. This feature is not specifically addressed under this evaluation.

OPTION 2 - Typical Components
Skid-Mounted, Portable Pig Handling Facility

Note: A pig launcher and a receiver are similar expect for the arrangement of the "kicker" line on the pig barrel, the position of pig signals and the internal rack or tray necessary to preposition or catch the pig to prevent pig damage/line plugging.

Refer to Sketch SK-3-5-03.

The most significant difference between Option 1 and Option 2 is the assumption that the pig launcher/receiver and appurtenant components would be skid-mounted and portable on a trailer or "low-boy." Also under Option 2, no enclosure module would be provided, and the ventilation and safety systems necessary for indoor operation would not be necessary. However, implementation of Option 2 would require addition of site-specific, permanent supports or drive-in ramps to permit expedited set-up and tie-in of the skid equipment. Since no site surveys have yet been conducted, this evaluation assumes these site-specific costs are analogous to costs for similar outdoor, permanent launcher/receiver platforms. Designing for portability dramatically reduces the number of skids necessary for equipment to serve all locations.

1. Pig barrel – generally two nominal pipe sizes larger than the line pipe
2. Pig barrel quick-opening cover with supporting davit - rating to match line pipe maximum design pressure application
3. Pig barrel vent, 1-inch minimum
4. Pig barrel drain, 2-inch or larger – (note that catchment and spill handling equipment are required)
5. Pressure indicator – Note that other means of assuring the barrel is completely de-pressurized before opening may be considered necessary. Automatic interlock devices can be provided to prevent opening of the barrel cover with pressure inside. These devices are not specifically considered by this evaluation.
6. Thermal relief valve – necessary on permanent facilities left packed with liquid
7. Pig barrel line isolation valves – note that BP generally requires two valves to provide double block and bleed due to hazards of high-pressure production fluids. These valves must be *full-bore, through-conduit* pipeline valves. Manual operation is assumed.
   Note: Under Option 2, it is assumed that a permanent line-pipe bypass is installed as well as leaving a permanent through-conduit valve and a permanent kicker line valve. Permanent valves are assumed to be installed with spool pups equipped with "Lock-O-Ring" flange and plug, removable through the second, temporary, valve using a hot-tap machine. (Other arrangements may be evaluated during conceptual design.)
8. "Kicker line" isolation valves – generally one or two nominal pipe sizes smaller than the line pipe. Again, twin valves and double block and bleed are generally required by BP. Manual operation is assumed. See note, above.
9. Main line bypass valve – same size and rating as line pipe, but does not need to be a through-conduit type valve. Manual operation is assumed. This valve and the bypass piping are assumed to be permanent under Option 2.

BPXA-CEC00010737

10. "Barred tee" – Tees where pig passage is required must have internal, longitudinally-aligned bars on the branch line to prevent the pig from lodging in the branch line during transit.
11. Factory sweep bends – radii to suit pig equipment requirements (generally 3 – 6 diameters of the line pipe).
12. Pig signals – For launching, one signal device is required downstream of the pig barrel line isolation valves to assure the pig has been launched. For receiving, a signal device is necessary as close to the barrel as possible to confirm that the pig has entered the barrel. Operational preferences may dictate a second pig signal some distance away on the main line to provide notice of pig approach or confirmation that the pig has moved well down the line.
13. Pig trays – One type may be wheel-equipped to facilitate moving the pig into position or to receive the pig when it is pulled out of the barrel. Another type of tray will be necessary for positioning the pig within the barrel on launching. A third type of tray or rack is necessary to catch an incoming pig and prevent it from becoming lodged in the "kicker line." Generally, specialized trays and wheel equipped carriers for inspection tools are provided by the in-line inspection (ILI) contractor.
14. Spill catchment system (assume movable pans suitable for emptying with vacuum truck hose or small utility pump) to safely collect drips and spills while the pig barrel is opened or being vented or drained.
15. *Housing module – Not included under Option 2*
16. *Trolley crane system for handling pigs, etc. – No permanent system would be provided under Option 2. However, pig barrel skids can be provided with such equipment, or crane support can be provided by wheel-mounted equipment, as is assumed under Option 2.*
17. *Heat/ventilation system – Not included under Option 2*
18. *Gas detection system – Not included under Option 2*
19. *Fire protection system – Not included under Option 2*
20. Air-operated "tugger" or manually operated "come-along" – Portable equipment under Option 2.
21. Compressed air supply (assume portable unit) may be necessary to power "tugger" equipment necessary to move and/or withdraw the pig and to power air-driven utility pump(s) and power hand tools. Option 2 assumes the crew equipment includes a dedicated wheel-mounted air compressor.
22. Assume one vacuum truck/tanker will be necessary to collect and haul collected fluids. Option 2 assumes this equipment is dedicated to the pigging crew.
23. Assume an air-driven, piston or high-pressure diaphragm actuated pump is utilized to transfer fluids from the pig barrel to the main line and for general cleanup. Option 2 assumes this equipment is dedicated to the pigging crew.
24. Pump-off connection (optional) – could be utilized to reduce fluid transport requirements.
25. An auxiliary nozzle may be necessary on the pig barrel for a gas connection if natural gas or nitrogen is used to launch and/or drive the pig or inspection tool. This feature is not specifically addressed under this evaluation.

OPTION 3 - Typical Components
Temporary Field-assembled Pigging Facilities

Note: A pig launcher and a receiver are similar expect for the arrangement of the "kicker" line on the pig barrel, the position of pig signals and the internal rack or tray necessary to preposition or catch the pig to prevent pig damage/line plugging.

Refer to Sketch SK-3-5-03.

Option 3 assumes that temporary pigging facilities are set up when needed using flanged, pre-tested spools. Although small skids may be necessary to transport the launcher/receiver barrels, it is assumed that a minimum of appurtenant equipment is installed and pre-assembled as part of the launcher/receiver skid. More importantly, it is assumed that site-specific, permanent supports or ramps are not available when setup begins. Temporary supports would need to be placed to accept the site-assembled flanged spools as well as the launcher/receiver assemblies. Timbers or some simple bolt-up steel support components would be utilized during site setup. Option 3 would entail significantly more on-site labor each time the crew was to prepare for a pigging operation. It is assumed that the inventory of components would be stored and transported according to size and rating and hauled to the site completely disassembled.

1. Pig barrel – generally two nominal pipe sizes larger than the line pipe
2. Pig barrel quick-opening cover with supporting davit - rating to match line pipe maximum design pressure application
3. Pig barrel vent, 1-inch minimum
4. Pig barrel drain, 2-inch or larger – (note that catchment and spill handling equipment are required)
5. Pressure indicator – Note that other means of assuring the barrel is completely de-pressurized before opening may be considered necessary. Automatic interlock devices can be provided to prevent opening of the barrel cover with pressure inside. These devices are not specifically considered by this evaluation.
6. Thermal relief valve – necessary on permanent facilities left packed with liquid
7. Pig barrel line isolation valves – note that BP generally requires two valves to provide double block and bleed due to hazards of high-pressure production fluids. These valves must be *full-bore, through-conduit* pipeline valves. Manual operation is assumed.
   Note: Under Option 3, it is assumed that a permanent line-pipe bypass is installed as well as leaving a permanent through-conduit valve and a permanent kicker line valve. Permanent valves are assumed to be installed with spool pups equipped with "Lock-O-Ring" flange and plug, removable through the second, temporary, valve using a hot-tap machine. (Other arrangements may be evaluated during conceptual design.)
8. "Kicker line" isolation valves – generally one or two nominal pipe sizes smaller than the line pipe. Again, twin valves and double block and bleed are generally required by BP. Manual operation is assumed. See note, above.
9. Main line bypass valve – same size and rating as line pipe, but does not need to be a through-conduit type valve. Manual operation is assumed. This valve and the bypass piping are assumed to be permanent under Option 3.

BPXA-CEC00010739

10. "Barred tee" – Tees where pig passage is required must have internal, longitudinally-aligned bars on the branch line to prevent the pig from lodging in the branch line during transit.
11. Factory sweep bends – radii to suit pig equipment requirements (generally 3 – 6 diameters of the line pipe).
12. Pig signals – For launching, one signal device is required downstream of the pig barrel line isolation valves to assure the pig has been launched. For receiving, a signal device is necessary as close to the barrel as possible to confirm that the pig has entered the barrel. Operational preferences may dictate a second pig signal some distance away on the main line to provide notice of pig approach or confirmation that the pig has moved well down the line.
13. Pig trays – One type may be wheel-equipped to facilitate moving the pig into position or to receive the pig when it is pulled out of the barrel. Another type of tray will be necessary for positioning the pig within the barrel on launching. A third type of tray or rack is necessary to catch an incoming pig and prevent it from becoming lodged in the "kicker line." Generally, specialized trays and wheel equipped carriers for inspection tools are provided by the in-line inspection (ILI) contractor.
14. Spill catchment system (assume movable pans suitable for emptying with vacuum truck hose or small utility pump) to safely collect drips and spills while the pig barrel is opened or being vented or drained.
15. *Housing module – Not included under Option 3*
16. *Trolley crane system for handling pigs, etc. – No permanent system would be provided under Option 3. However, pig barrel skids can be provided with such equipment, or crane support can be provided by wheel-mounted equipment, as is assumed under Option 3.*
17. *Heat/ventilation system – Not included under Option 3*
18. *Gas detection system – Not included under Option 3*
19. *Fire protection system – Not included under Option 3*
20. Air-operated "tugger" or manually operated "come-along" – Portable equipment under Option 3.
21. Compressed air supply (assume portable unit) may be necessary to power "tugger" equipment necessary to move and/or withdraw the pig and to power air-driven utility pump(s) and power hand tools. Option 3 assumes the crew equipment includes a dedicated wheel-mounted air compressor.
22. Assume one vacuum truck/tanker will be necessary to collect and haul collected fluids. Option 3 assumes this equipment is dedicated to the pigging crew.
23. Assume an air-driven, piston or high-pressure diaphragm actuated pump is utilized to transfer fluids from the pig barrel to the main line and for general cleanup. Option 3 assumes this equipment is dedicated to the pigging crew.
24. Pump-off connection (optional) – could be utilized to reduce fluid transport requirements.
25. An auxiliary nozzle may be necessary on the pig barrel for a gas connection if natural gas or nitrogen is used to launch and/or drive the pig or inspection tool. This feature is not specifically addressed under this evaluation.

3

Size/Pressure Class for Estimates

Equip ID	Equip Type	Nominal Pipe Size	Hydraulic Length	Service	MAOP	Assumed Minimum ANSI Line Class	CIC Priority
16C/17C	CL	24	15,000	PRF	1296	600	1
PTMCLS01	CL	24	16,700	PRF	1364	600	1
16C	CL	24	11,500	PRF	1032	600	1
09A	CL	24	15,982	PRF	1402	600	1
04C	CL	24	7,299	PRF	1046	600	1
12C	CL	24	18,769	PRF	1050	600	1
16D	CL	16	25,877	PRF	1785	900	1
14B/14C	CL	24	6,650	PRF	1076	600	1
06C/13B	CL	24	10,000	PRF	1078	600	1
06C	CL	24	595	PRF	1080	600	1
09B	CL	16	16,239	PRF	3211	1500	1
17D	CL	16	25,651	PRF	1807	900	1
01C	CL	20	6,800	PRF	1750	900	1
12B	CL	16	17,582	PRF	1765	900	1
17C	CL	24	12,645	PRF	1099	600	1
03D	CL	16	15,354	PRF	1775	900	1
14D	CL	12	7,200	PRF	2643	1500	1
07B	CL	12	5,106	PRF	2645	1500	1
02D	CL	12	8,739	PRF	2647	1500	1
11A	CL	24	2,206	PRF	988	600	1
04B	CL	12	10,528	PRF	2661	1500	1
13B	CL	24	11,500	PRF	1116	600	1
07D	CL	12	5,106	PRF	2664	1500	1
13D	CL	12	21,984	PRF	2669	1500	1
04D	CL	12	50	PRF	2679	1500	1
11D	CL	16	2,264	PRF	1864	900	1
02B	CL	12	8,739	PRF	2681	1500	1
PTMCLS0102	CL	24	6,900	PRF	1521	900	1
06D	CL	12	10,528	PRF	2718	1500	2
02D/05E	CL	12	500	PRF	2728	1500	2
11B	CL	12	2,139	PRF	2899	1500	2
01B	CL	12	7,091	PRF	2778	1500	2
TLGC3/PS3	FL	24	22,704	OIL	4197	2500	2
18D	CL	16	18,400	PRF	1943	900	2
15B	CL	12	18,166	PRF	2931	1500	2
01D	CL	16	7,058	PRF	1894	900	2
04B	CL	12	7,555	PRF	2803	1500	2
05B	CL	12	5,795	PRF	2803	1500	2
09E	CL	24	16,340	PRF	1670	900	3
PS3/TIE-30	CL	30	1,544	OIL	1145	600	2
15D	CL	16	18,082	PRF	2086	900	3
05E	CL	8	6,000	PRF	4786	2500	3
18B	CL	12	18,560	PRF	3151	1500	3
PS1/ALPS-34	CL	34	25,996	OIL	1013	600	2
07C/15C	CL	24	4,200	PRF	1257	600	3
02C	CL	24	8,678	PRF	1257	600	3
07C	CL	24	633	PRF	1258	600	3
LS02	CL	14	7,300	PRF	2156	900	3
15C	CL	24	13,982	PRF	1258	600	3
PS2/PS1OIL	CL	30	16,229	OIL	1151	600	2
05D	CL	12	5,795	PRF	3014	1500	3
03A	CL	24	70	PRF	1543	900	3
06E	CL	12	3,100	PRF	3170	1500	3
LS04/05	CL	24	17,200	PRF	1685	900	3
LPC OIL SALES	CL	16	32,500	PRF	2305	1500	2
LS08	CL	18	18,900	PRF	1870	900	3
LS03	CL	18	16,900	PRF	1870	900	3
02E	CL	16	8,818	PRF	2529	1500	3
LS04	CL	18	14,200	PRF	1871	900	3
TLPS1/PS3	CL	24	21,000	PRF	2250	1500	2
PTMC02	CL	24	5,280	OIL	1687	900	3
PTMC	CL	24	23,250	PRF	1125	600	3
03C	CL	24	14,534	PRF	1264	600	3
CLNK	CL	18	23,900	PRF	1872	900	3
LS01	CL	12	150	PRF	2346	1500	3
NPWB-12	CL	12		OIL	5251	2500	3
01-AL	CL	12	7,073	GAS	3026	1500	3
03-AL	CL	12	15,354	GAS	3026	1500	3
09-AL	CL	12	16,239	GAS	3026	1500	3
LS02THE	CL	8	1,494	PRF	6260	2500	3
LS02THW	CL	8	930	PRF	6260	2500	3

BPXA-CEC00010742

4

Takeoffs by Size/Class/Option

Approximate Distribution by Nominal Pipe Size and Line Class - Option 1

NP Size:	8	12	14	16	18	20	24	30	34
Class:									
600							18	2	1
900			1	8	4	1	5		
1500		22		3			1		
2500	3	1					1		

Launcher & Receiver Unit Pairs Assumed Necessary - Options 2 & 3
by Size and Rating

NP Size:	8	12	14	16	18	20	24	30	34
Class:									
600							(Use 2500)	1	1
900			1	(Use 1500)	1	1	(Use 2500)		
1500		(Use 2500)		1			(Use 2500)		
2500	1	1					1		

Notes:
1) It is assumed that flanged adapter pups could be utilized on the skid-to-isolation-valve connections.
2) Isolation valve sets would be required for the line class rating in each use.
3) Total pig barrel units assumed = 18 (9 launcher units & 9 receiver units).

Approximate Count - Mainline Thru-conduit Valves - Option 1
by Size and Rating (2 each site x 2 sites/line)

NP Size:	8	12	14	16	18	20	24	30	34
Class:									
600							72	8	4
900			4	32	16	4	20		
1500		88		12			4		
2500	12	4					4		

Approximate Count - Fixed, Mainline Thru-conduit Valves - Option 2/3
by Size and Rating (1 each site x 2 sites/line)

NP Size:	8	12	14	16	18	20	24	30	34
Class:									
600							36	4	2
900			2	16	8	2	10		
1500		44		6			2		
2500	6	2					2		

Approx. Count - Movable, Mainline Thru-conduit Valves - Option 2/3
by Size and Rating (1 each launcher/receiver skid or set-up)

NP Size:	8	12	14	16	18	20	24	30	34
Class:									
600							2	2	2
900			2	2	2	2	2		
1500		2		2			2		
2500	2	2					2		

The above were developed from the CIC Pipeline Priority List received 2/21/03.

5

ATTACHMENT 2 ENGINEERING AUTHORIZATION CHECKLIST

Group/ Deliverables	Conceptual Engr	Preliminary Engr	Detail Engr	Comments
PROJECT MANAGEMENT				
Scope of Work / Project Execution Plan				
• Scope of Work	x	x	x	From Client
• Operations Plan		P	x	From Client
• Design Basis/Criteria	P	x	x	
• Project Team Organization	P	x	x	
• Options Identified	x	x		
• Milestone Schedule	P	x	x	From Client
• Deliverables List	x	x	x	
• Engineering Schedule	x	x	x	
• Engineering Authorization Estimate	x	x	x	
• Variance Report (from previous phase)		x	x	
• Work Breakdown Structure	P	x	x	From Client
• Procurement Plan	P	x	x	From Client
– Material Responsibility Matrix				
– Procurement Status Report				
• Project Control Plan	P	x	x	
• Assumptions & Risks	x	x	x	
Deliverables Checklist	x	x	x	
Regulatory Compliance Studies	P	x		By Client
Regulatory Agency Permit Plan	P	x		By Client
HSE Plan		P	x	From Client
Sponsor Meeting Presentation Report	x	x	x	
30% Meeting with Operations		x		
70% Meeting with Operations			x	
Documentation	x	x	x	
Lessons Learned	x	x	x	
PROCESS				
Process Scope of Work	P	x	x	
PFDs	P	x	x	
P&IDs	P	x	x	
PHA review		x	x	
Simulations/Calculations	P	x	x	
Remaining Detailed Drawings for IFC		P	x	
PSV Audit Files			x	
Process Data Sheets		P	x	
Sized Equipment List	P	x	x	
Engineering Authorization Estimate	x	x	x	

Note: P = preliminary

Engineering Authorization continued;

Group/ Deliverables	Conceptual Engr	Preliminary Engr	Detail Engr	Comments
CIVIL				
Civil Scope of Work	x	x	x	
Surveying Requirements	P	x	x	
Geotechnical Studies	P	x	x	
Demolition Quantities	P	x	x	
VSM Plan/Location Plan		P	x	
VSM Takeoff	P	x	x	
Site Plan	P	x	x	
Gravel & Grading Plan		P	x	
Gravel Estimated Quantities	P	x	x	
Gravel, Corps of Engineers & ADEC Permit Packages		P	x	By Client
Road Crossings & Caribou Crossings		P	x	
Foundation Quantities (grade beams, reinforced concrete)	P	P	x	
Other Significant Quantities (sheet pile, riprap, utilidors, liners & containment, thermosyphons)	P	P	x	
Remaining Detailed Drawings for IFC		P	x	
Engineering Authorization Estimate	x	x	x	
STRUCTURAL				
Structural Scope of Work	x	x	x	
Demolition Quantities	P	x	x	
Module Steel Tonnage	P	x	x	
Piperack Steel Tonnage	P	x	x	
Misc. Steel Tonnage (platforms, stairways, ladders, wellhead platforms)	P	x	x	
Slide Plates & Pipe Guide Quantities	P	x	x	
Fireproofing Estimated Quantities	P	x	x	
Architectural Quantities (well houses, insulated panels, misc. shelters, doors & hardware)	P	x	x	
Well House Action Plan		x	x	
Remaining Detailed Drawings for IFC		P	x	
Engineering Authorization Estimate	x	x	x	

Engineering Authorization continued;

Group/ Deliverables	Conceptual Engr	Preliminary Engr	Detail Engr	Comments
MECHANICAL and H&V				
Mechanical Scope of Work	x	x	x	
Mechanical Equipment List	P	x	x	
Equipment Arrangement	P	P	x	
Equipment Data Sheets or Specifications	P	P	x	
Flexibility Studies for Large Bore Lines		P	x	
H&V Scope of Work	x	x	x	
H&V Equipment List	P	x	x	
H&V Flow Diagram		P	x	
H&V Plans & Sections		P	x	
BOMs (all disciplines)	P	P	x	
Remaining Detailed Drawings for IFC		P	x	
Engineering Authorization Estimate	x	x	x	
FIRE & GAS				
F&G Scope of Work	x	x	x	
F&G P&IDs	P	x	x	
F&G Equipment List	P	x	x	
Fire Marshal Plan		P	x	
Fire Protection Plans & Sections		P	x	
F&G Detection & Alarm One-Line Dwgs		P	x	
Remaining Detailed Drawings for IFC		P	x	
Engineering Authorization Estimate	x	x	x	
PIPING				
Piping Scope of Work	x	x	x	
Plot Plan	P	x	x	
Line List	P	P	x	
Piping Isometric Drawings		P	x	
Piping General Arrangement Dwgs/Plans	P	P	P	
Piping Flexibility Studies/Stress Sketches		P	x	
Large Bore & Heavy Wall Pipe Sketches	P	x	x	
Large Bore & Heavy Wall Pipe & Valve Takeoff	P	x	x	
Small Bore Pipe Estimated Quantities	P	x	x	
Small Bore Valve Estimated Quantities	P	x	x	
Pipe Slides & Anchors Estimated Quantities	P	x	x	
Pipe Insulation Estimated Quantities	P	x	x	
Equipment Location Drawings	P	x	x	
Demolition Requirements	P	x	x	
Adjustable Pipe Support Quantities	P	x	x	
Tie-in List	P	P	x	
Hot Tap List	P	x	x	
Remaining Detailed Drawings for IFC		P	x	
Engineering Authorization Estimate	x	x	x	

Engineering Authorization continued;

Group/ Deliverables	Conceptual Engr	Preliminary Engr	Detail Engr	Comments
INSTRUMENTATION & CONTROLS				
Instrumentation Scope of Work	x	x	x	
Instrument Control System Architecture & Studies	P	x	x	
Instrument Equipment List	P	x	x	
Instrument Index (with temporary tags)		P	x	
Junction Box Type & Quantity	P	P	x	
Instrument Cable Types & Estimated Quantities	P	P	x	
P&IDs	P	x	x	
Engineered Controls Data		P	x	
Instrument Location Plan		P	x	
Remaining Detailed Drawings for IFC		P	x	
Engineering Authorization Estimate	x	x	x	
As-Builts			x	
ELECTRICAL				
Electrical Scope of Work	x	x	x	
Single-line Diagrams	P	x	x	
Electrical Plan Drawings, Power, Lighting, Grounding	P	P	x	
Electrical Studies (load, power flow, harmonics)	P	x	x	
Electrical Equipment List	P	x	x	
Electrical Equipment Data Sheets or Specifications	P	P	x	
Electrical Area Classification Plans	P	x	x	
Other Significant Quantities (heat tracing, power cable, conduit, grounding materials)	P	P	x	
Heat Trace (HT ISO or P&ID)	P	P	x	
Cable Schedule	P	P	x	
Remaining Detailed Drawings for IFC		P	x	
Engineering Authorization Estimate	x	x	x	
As-Builts			x	

Engineering Authorization continued;

Group/ Deliverables	Conceptual Engr	Preliminary Engr	Detail Engr	Comments
PROJECT CONTROLS				
Project Summary Schedule	x	x	x	From Client
Schedule w/ Manloading & Contingency	P	x	x	
Project Cash Flow Curve	P	x	x	
Conceptual TIC Estimate Package	x			
Sanction TIC Estimate Package		x		
Construction Contractor Estimate (Prelim.)		x		
Control Estimate			x	
Engineering Authorization Estimate	x	x	x	
PROCUREMENT				
Procurement Plan	P	x	x	From Client
• Material Responsibility Matrix				
• Procurement Status Report				
Vendor Quotes for Engineered Equipment	P	P	x	
Vendor Data for Engineered Equipment		P	x	
Vendor Quotes for Mechanical Equipment	P	P	x	
Vendor Quotes for Electrical Equipment	P	P	x	
Vendor Quotes for Electrical Modules	P	P	x	
Vendor Quotes for F&G Equipment		P	x	
Vendor Quotes for Special Instruments, Equipment	P	P	x	
Vendor Quotes for PSVs		P	x	
List of Purchased Materials (BOMs)		P	x	
Engineering Authorization Estimate	x	x	x	
Documentation			x	

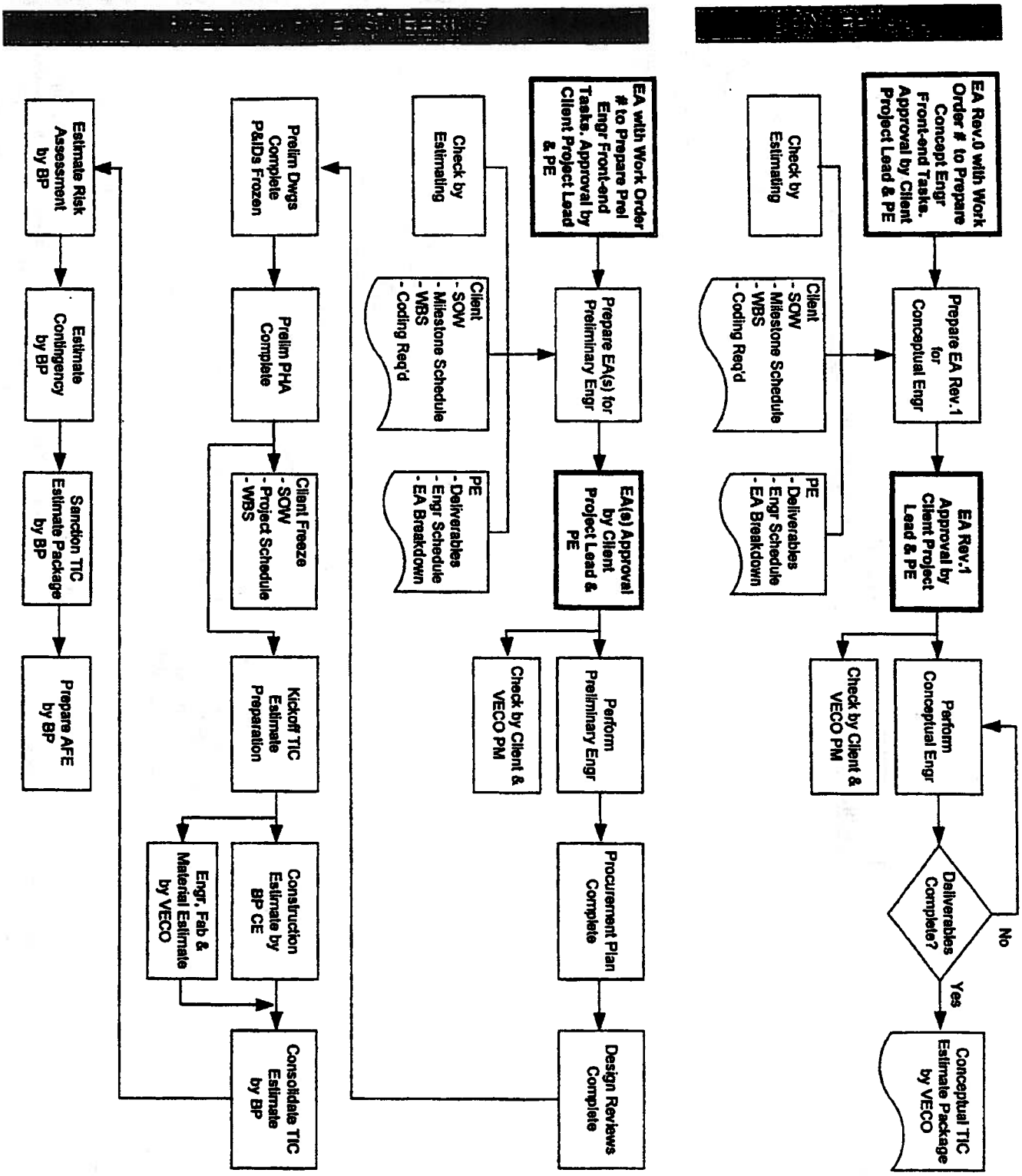

ATTACHMENT 1- Engineering Authorization Flow Chart - Sheet 1 of 2

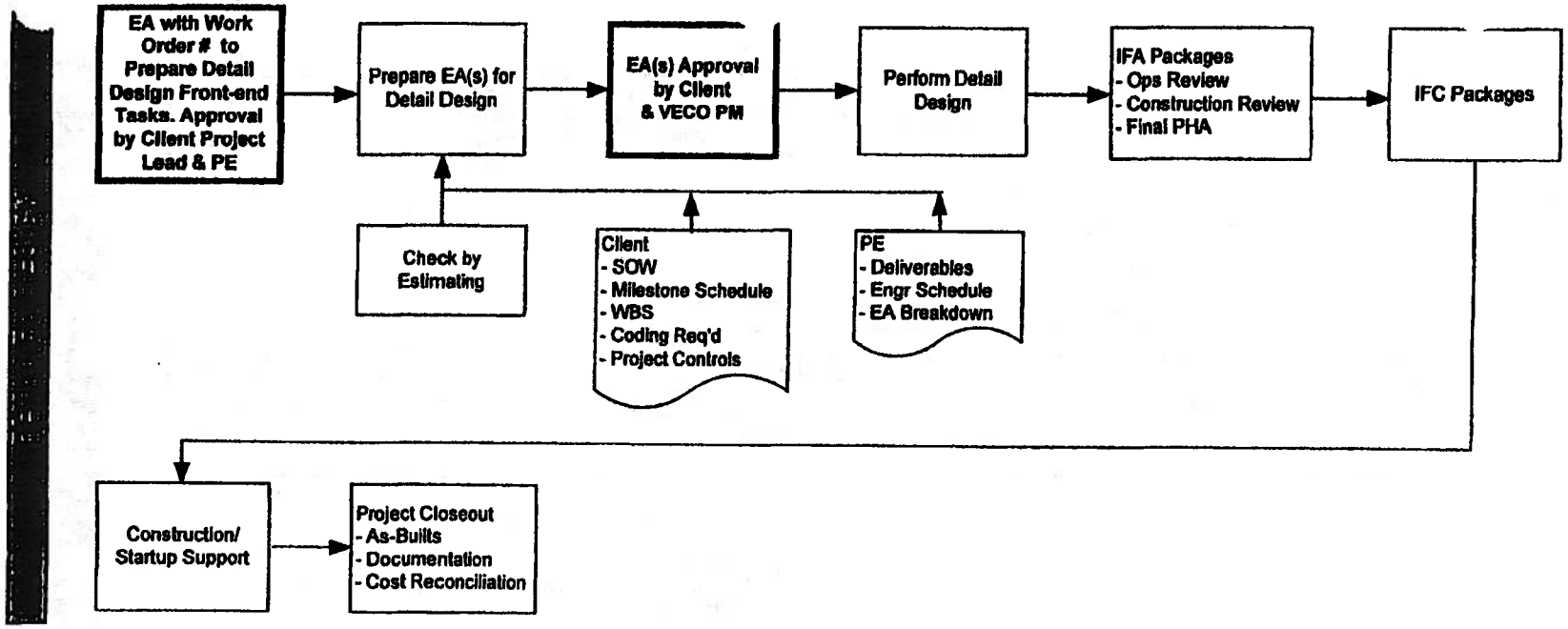

NOTE: ***BOLD DENOTES APPROVAL STEP***

SHAPE DENOTES A DOCUMENT

ATTACHMENT 1 - Engineering Authorization Flow Chart Sheet 2 of 2

BPXA-CEC00010752

9

GPB PIG LAUNCHER & RECEIVER FACILITIES
TIC Estimate Basis

OPTION I – MODULAR FACILITIES

1. Scope of Work

   This TIC Estimate is for costs associated with providing new pigging modules at each end of seventy-one (71) existing lines identified for priority internal inspection. This estimate will provide the basis for future investment and design decisions. The major scope items include:

   - Support piles for each of the new modules.
   - New modules and support piles at 142 locations c/w power, lights, H&V, and F&G.
   - Permanent tie-ins of the new launchers and receivers to the subject pipelines.

2. Cost Elements

   Rates for North Slope direct and indirect man-hours and staff, construction equipment, consumables, field wide indirects, material handling, freight, Design/Engineering and 3rd party contractors, and Unit Operator Cost are shown in Table 1-1. These are current average rates and fixed by BP.

3. Civil/Structural/Architectural Works

   Material, fabrication, and installation module and pile costs are based upon BP historical data derived from past major projects. This data was scaled to meet the particulars for this project.

4. Piping Works

   Piping Works include connecting lines from the new modules to the existing drop-out spool locations. Budgetary quotations were obtained for the major valves or extrapolated as necessary. The balance of the piping requirements were factored from the valve costs using BP historical data.

5. Electrical and Instrument Works

   Allowances are included within the Module costs for required interconnections for power, lighting, H&V, and F&G.

6. Engineering

   Engineering and Design costs are based on a preliminary assessment by Estimating of the level of effort required. These costs include conceptual, preliminary, and detailed design. PHA review, BP Support (Project Control) Personnel, Staff allocations, construction support, and "as-built" drawings are included.

7. Escalation

   Costs used in this estimate are present day. No installation schedule has been established from which to base projected expenditures. Therefore no forward escalation is included.

8. Contingency

BPXA-CEC00010754

A contingency level of 25% was applied due to the early and conceptual nature of the project.

9. Assumptions and Exclusions

Detail Design will be performed in Anchorage by VECO Alaska, Inc. under the direction of a resident BP Project Lead.
There is adequate space and access to install permanent facilities (modules) at each end of each of the subject pipelines.
There is a drop-out spool existing at the point of connection for pigging facilities at each end of each of the subject pipelines.
Each of the subject pipelines is currently in a piggable condition. All changes of direction are of an acceptable radius to allow the passage of the intended "smart pigs".
All existing branch connections are accomplished with barred tees in the section of line between drop-out spools.
With the exception of tie-ins, all modifications to existing lines are specifically excluded from the scope of this estimate.
This estimate does not include costs for vendor development of non-standard items. It is assumed that all necessary materials (including launchers, receivers, valves, flanges, proprietary closures, 24"-2500# components, etc.) will be provided as standard supply.
Modules will be fabricated to a substantially complete status before delivery to the North Slope, including installation of equipment, piping, instrumentation, electrical, H&V and F&G systems and/or components.
Piping will be fabricated into erection spools to the greatest extent practical.
Module and piping spool fabrication works will be competitively bid.
A North Slope contractor will perform the installation work under the Shared Services agreement.
The timing (schedule) for this work is unknown. Therefor forward escalation is excluded.
All materials incorporated into this project will be new and charged to this project.

BPXA-CEC00010755

Table 1-1 Project Cost Elements

Item	Cost Element	Basis	Comments & Assumptions
1.	N/S Composite Craft Labor Rate	$52.98/mh	Applied to all direct and indirect hours.
2.	N/S Staff Labor	$17.71/mh	Applied to total craft hours.
3.	Fab Shop Composite Labor Rate	$55.00/mh	Applied to total craft and staff hours.
4.	3rd Party Engineering (Survey, Geotech, etc.)	$53.00/mh	Applied to 9.0% of total N/S hours.
5.	3rd Party Contracting (FCO, SQS, Q/A, NDE)	$58.00/mh	Applied to 10.0% of F/S hours and 22.0% of N/S hours.
6.	Automation/Programming	$1500/day	As required for specific tasks.
7.	Anchorage Eng./Design	$75.00/mh	Applied as detailed on page 4 of the estimate, includes BP Support.
8.	N/S Eng./Design	$75.08/mh	Applied as necessary.
9.	Project Engineering (Anchorage based)	$840/day $1100/day	Applied to BP/VECO Leader. Applied to UOSS Leader.
10.	Construction Mgr./Eng.	incl.	Included with FWI.
11.	Construction Equipment	$5.00/mh $9.40/mh	Applied to total F/S hours. Applied to total N/S hours.
12.	Small Tools & Consumables	$2.50/mh	Applied to total N/S hours.
13.	Field Wide Indirects	$25.00/mh	Applied to total N/S hours.
14.	PHA	incl.	Included in engineering.
15.	As Built Drawings	7.5%	Added to Design/Drafting hours.
16.	Material Handling Allocation	6.0%	Applicable to all material costs
17.	Freight Allocation	10.0%	Applicable to all material costs
18.	Logistics	10.0%	Applied to fabrication costs with a $2000 minimum.
19.	Operations Support	5.0%	Applied to total costs.
20.	Unit Operator Cost	-	Allowance for discipline engineers for 1 day per site participation in meetings, research, etc..

BPXA-CEC00010756

BP EXPLORATION (ALASKA), INC.

PRUDHOE BAY, ALASKA

ESTIMATE TITLE:	**MODULE INSTALLATION**	Estimate Type:	**Appraisal**
Estimate #:	**3903 OPTION 1**	Estimate Accuracy:	**+/- 50%**
Project Name:	**GPB PIG L&R FACILITIES**	Project Leader:	**T. PINE**
	OPTION 1	Project Mgr./Eng.:	**R. WEDGE**
		Prepared By:	**J.DIAMOND**
		Date:	**13-Mar-2003**
		Rev. No. :	**IFR b**

ASSUME INSTALLATION WILL BE DONE BY SHARED SERVICES CONSTRUCTION GROUP

2003 Year of Installation

		Manhours		Costs				
Coding Account	Description	Fab. Site	N.S. Contr.	Fab. Material	N.S. Material	Fab.	Inst'l	Total
0x-xxx	CIVIL WORKS		22,720	2,272,000			1,203,706	3,475,706
1x-xxx	CONCRETE WORKS							
2x-xxx	STRUCTURAL WORKS							
3x-xxx	MODULE WORKS	2,086,922	241,644	141,141,830		114,780,710	12,802,286	268,724,826
4x-xxx	MAJOR EQUIPMENT							
5x-xxx	PIPING WORKS SUMMARY	27420		13,426,000		1,508,100		14,934,100
6x-xxx	ELECTRICAL WORKS							
7x-xxx	INSTRUMENTATION WORKS							
8x-xxx	PROTECTIVE COATING WORKS							
	Subtotal Direct Craft	2,114,342	264,364			116,288,810	14,005,992	130,294,802
	Indirect Craft Labor	232,578	92,527			12,791,790	4,902,090	17,693,880
	Subtotal	**2,346,920**	**356,891**	**156,839,830**		**129,080,600**	**18,908,082**	**304,828,512**
	Contractor Staff	563261				30,979,360	6,320,540	37,299,900
	Construction Equipment					11,734,600	3,354,770	15,089,370
	Survey, Geotech, Other 3rd Party		32,120				1,702,370	1,702,370
(Pg. 4, Item B)	FCO, SQS, Q/A, NDE, & Automatic	234692	78,516			13,612,140	4,598,930	18,211,070
	Subtotal	3,144,873	467,527	156,839,830		185,406,700	34,884,692	377,131,222
(Pg. 4, Item E)	Freight			15,683,980				15,683,980
(Pg. 4, Item E)	Material Handling			9,410,390				9,410,390
(Pg. 4, Item E)	Small Tools & Consumables				1,168,820			1,168,820
(Pg. 4, Item E)	Fieldwide Indirects						11,688,180	11,688,180
(Pg. 4, Item C)	Other Indirect Cost (Anch.)						198,000	198,000
	SUBTOTAL	**3,144,873**	**467,527**	**181,934,200**	**1,168,820**	**185,406,700**	**46,770,872**	**415,280,592**
	Logistics (Transportation)							**18,540,670**
(Pg. 4, Item A)	Detail Design/Engineering							**27,035,410**
(Pg. 4, Item A)	Conc. & Prelim. Design/Engineering							**27,000,000**
(Pg. 4, Item A)	'As-Built' Drawings							**1,943,070**
(Pg. 4, Item D)	Unit Operator Cost (Anchorage)							**59,640**
(Pg. 4, Item D)	Unit Operator Cost (North Slope)							
	Operations Support	5.0%						**24,492,970**
	Permitting	426,000	Allowance for up to three permits per site at $1000/each.					**426,000**
	Forward Escalation							
	Subtotal							**514,778,352**
	Contingency @	25.0%						**128,694,648**
	TOTAL							**643,473,000**

PROJECT: 125698
WP: 3903

BPXA-CEC00010758

ASSUMPTIONS AND QUALIFICATIONS:

1. The composite labor rates used in preparing this estimate are as follows:

N/S Contractor Labor Rate Used:	$52.98/mh)	apply to all direct and indirect manhours			
N/S Contractor Staff Rate Used:	$17.71/mh				
Survey, Geotech, Other 3rd Party	$53.00/mh	apply to	9.0%	of total N/S mh	
FCO, SQS, Q/A, NDE	$58.00/mh	apply to	22.0%	of N/S mh,	10.0% of F/S mh
Automation/PLC Programming:	$1,500/day				
Offsite Fabrication Contractor:	$55.00/mh	apply to fab site direct craft, indirect craft, & staff			
Anchorage Design/Drafting:	$75.00/mh				
North Slope Design/Drafting:	$75.08/mh				
Anch. Project Engr'g:	$840/day				
Const. Mgr. / Engr.:	$2.30/mh				
Equipment Rate Used:	$9.40/tmh (field)	$5.00/tmh (shop)			

2. The basis for allocation rates used in preparing this estimate are as follows:

Fieldwide Indirects:	$25.00/mh	(GPB Project)
Small Tools & Consumables:	$2.50/mh	
Mat'l. Handling:	6.00%	LS
Freight:	10.00%	LS

3. Work will be performed by a N.S. Project Construction Group contractor.

4. Indirect Labor(Craft):

	Percent	Mhr
Cleanup	1.62%	4295
Scaffold	5.56%	14710
Mob/Demob	5.95%	15740
Firewatch/Safety	1.41%	3736
Standby Time	0.78%	2059
*Temporary Construction	0.19%	500
**Unallocable labor	5.76%	15240
Equipment Support Labor	13.71%	36246
Field Admin		
N/S Subtotal	35.00%	92,527
Fab site	11%	(applied to total direct manhours)

* Include Snow Removal & Ice Roads
**(i.e., expediters, mat'l handlers)

5. Indirect Labor(Staff):
(Direct + Indirect Craft Factor) N/S Staff (included at $13.94 / mh))
Fab Shop Staff 24%

AFE FORMAT BREAKDOWN:

CATEGORY:	ESTIMATE $
ENGINEERING	55,978,480
MATERIALS	201,643,690
FABRICATION	185,406,700
INSTALLATION	42,171,942
UNIT OPERATOR COST	59,640
OPERATIONS SUPPORT	24,492,970
FCO, SQS, Q/A, NDE	4,598,930
PERMITTING	426,000
ESCALATION	
CONTINGENCY	128,694,648
TOTAL	643,473,000

ENGINEERING & UNIT OPERATOR COST

	Qty.	Unit	Rate	Total Cost	
A. ENGINEERING					
Anchorage Design/Drafting	345,000	Hours	75.00	25,875,000	
North Slope Design/Drafting		Hours	75.08		
Preliminary Design/Drafting	360,000	Hours	75.00	27,000,000	
Other 3rd Party Engineering		Hours	90.00		
Const. Suppt./Close Out	17,250	Hours	67.27	1,160,410	(allowance at 5.0% of Design/Drafting hours)
'As-Built' Drawings	25,880	Hours	75.08	1,943,070	(allowance at 7.5% of Design/Drafting hours)
SUB TOTAL ENGINEERING	748,130	Hours		55,978,480	
B. OTHER INDIRECT COST					
Supplier Quality Surveillance	0.50%				
Automation/PLC Programming	30	Days	1,500	45,000	
SUB TOTAL OTHER INDIRECT				45,000	
C. OTHER INDIRECT COST (ANCHORAGE)					
Project Cost Control	(incl. W/ Eng'g.	Hours	75.00		
Contr. Project Engineering - VECO		Days	840		
Contr. Project Engineering - UOSS	180	Days	1,100	198,000	
SUB TOTAL OTHER INDIRECT (ANCHORAGE)				198,000	
D. UNIT OPERATOR COSTS					
BPX Project Engineering		Days	840		
Discipline / Facility Engineering	71	Days	840	59,640	
Construction Superintendent		Hours	2.30		(incl. w/FWI)
SUB TOTAL UNIT OPERATOR COST				59,640	

E. ALLOCATIONS		Rate		Material Basis	Manhour Basis	Material Allocation	Labor Allocation
Fieldwide Indirects - N/S		25	$/mh		467,527		11,688,180
Small Tools & Consumables - N/S		2.5	$/mh		467,527	1,168,820	
Material Handling *	- Fab Sh	6%		156,839,830		9,410,390	
	- North Slope	6%					
Freight	- Fab	10%		156,839,830		15,683,980	
	- North Slope	10%					
* To a maximum mat'l handling expenditure of $50,000/item							
SUB TOTAL ALLOCATIONS						26,263,190	11,688,180

MODULE INSTALLATION

PROJECT: GPB PIG L&R FACILITIES
CLIENT: BP EXPLORATION (ALASKA), INC.
LOCATION: PRUDHOE BAY, ALASKA
OPTION 1

Estimate No.: 3903 OPTION 1
Estimator: J.DIAMOND
Date: 13-Mar-03
Rev.: IFR b

Market Condition: 1.0
Fab Shop Prod.: 1.0
North Slope Prod.: 1.0

Labor Rates: ($/hr)
F/S: 55.00
N/S: 52.98

CIVIL WORKS ESTIMATE WORKSHEET
0X-XXX

Code	Size	Description	MOD	Q/MOD	MTO QUANTITY F/S	MTO QUANTITY N/S	UOM	MATERIAL UNIT COST	MANHOURS (M/H) UNIT F/S	MANHOURS (M/H) UNIT N/S	MANHOURS (M/H) TOTAL F/S	MANHOURS (M/H) TOTAL N/S	COST ($) MATERIAL F/S	COST ($) MATERIAL N/S	COST ($) LABOR F/S	COST ($) LABOR N/S	COST ($) TOTAL F/S	COST ($) TOTAL N/S
			MOD	Q/MOD														
		12" PILES at 40' long	142	8	1136		EA	2,000.00	20.00		22720.0		2272000			1203706	2272000	1203706
SUB -TOTAL											22720.0		2272000			1203706	2272000	1203706
		Design Development																
		Procurement Bump																
		Market Trend																
		Productivity Allowance																
		Allowance for unlisted items																
TOTAL		CIVIL WORKS 0X-XXX									22720.0		2272000			1203706	2272000	1203706

G:\WAB\BPProj\TIC_Est\4.0 GPB_Est\3903 GPB Pig Launcher & Receiver Facilities\ROM TIC Option 1.XLS]0 CIVIL

14/Mar/03

PROJECT: 125698
WP: 3903

BPXA-CEC00010761

MODULE INSTALLATION

PROJECT: GPB PIG L&R FACILITIES
CLIENT: BP EXPLORATION (ALASKA), INC.
LOCATION: PRUDHOE BAY, ALASKA
OPTION 1

Estimate No.: 3903 OPTION 1
Estimator: J.DIAMOND
Date: 13-Mar-03
Rev.: IFR b

Market Condition: 1.00
Fab Shop Prod.: 1.0
North Slope Prod.: 1.0

Labor Rates: ($/hr)
F/S: 55.00
N/S: 57.18

ARCHITECTURAL/BUILDING WORKS ESTIMATE WORKSHEET 3X-XXX Code	Size	Description	MTO QUANTITY F/S	MTO QUANTITY N/S	UOM	MATERIAL UNIT COST	MANHOURS (MH) UNIT F/S	MANHOURS (MH) UNIT N/S	MANHOURS (MH) TOTAL F/S	MANHOURS (MH) TOTAL N/S	COST ($) MATERIAL F/S	COST ($) MATERIAL N/S	COST ($) LABOR F/S	COST ($) LABOR N/S	COST ($) TOTAL F/S	COST ($) TOTAL N/S
9																
	3	PIG LAUNCHER MODULE (complete)	540		SF	1,285	19.0	2.20	30,740	3564.0	2,081,700		1,692,900	188821	3774600	188821
	4	PIG LAUNCHER MODULE (complete)	602		SF	1,285	19.0	2.20	45,752	5297.6	3,094,280		2,516,360	280667	5610640	280667
	11	PIG LAUNCHER MODULE (complete)	615		SF	1,285	19.0	2.20	128,535	14883.0	8,693,025		7,069,425	788502	15762450	788502
	1	PIG LAUNCHER MODULE (complete)	637		SF	1,285	19.0	2.20	12,103	1401.4	818,545		665,665	74247	1484210	74247
	23	PIG LAUNCHER MODULE (complete)	658		SF	1,285	19.0	2.20	287,546	33294.8	19,447,190		15,815,030	1763959	35262220	1763959
	1	PIG LAUNCHER MODULE (complete)	675		SF	1,285	19.0	2.20	12,825	1485.0	867,375		705,375	78676	1572750	78676
	25	PIG LAUNCHER MODULE (complete)	972		SF	1,285	19.0	2.20	461,700	53460.0	31,225,500		25,393,500	2832311	56619000	2832311
	2	PIG LAUNCHER MODULE (complete)	1044		SF	1,285	19.0	2.20	39,672	4593.6	2,683,080		2,181,960	243369	4865040	243369
	1	PIG LAUNCHER MODULE (complete)	1292		SF	1,285	19.0	2.20	24,548	2842.4	1,660,220		1,350,140	150591	3010360	150591
	3	PIG RECEIVER MODULE (complete)	540		SF	1,285	19.0	2.20	30,780	3564.0	2,081,700		1,692,900	188821	3774600	188821
	4	PIG RECEIVER MODULE (complete)	602		SF	1,285	19.0	2.20	45,752	5297.6	3,094,280		2,516,360	280667	5610640	280667
	11	PIG RECEIVER MODULE (complete)	615		SF	1,285	19.0	2.20	128,535	14883.0	8,693,025		7,069,425	788502	15762450	788502
	1	PIG RECEIVER MODULE (complete)	637		SF	1,285	19.0	2.20	12,103	1401.4	818,545		665,665	74247	1484210	74247
	23	PIG RECEIVER MODULE (complete)	658		SF	1,285	19.0	2.20	287,546	33294.8	19,447,190		15,815,030	1763959	35262220	1763959
	1	PIG RECEIVER MODULE (complete)	675		SF	1,285	19.0	2.20	12,825	1485.0	867,375		705,375	78676	1572750	78676
	25	PIG RECEIVER MODULE (complete)	972		SF	1,285	19.0	2.20	461,700	53460.0	31,225,500		25,393,500	2832311	56619000	2832311
	2	PIG RECEIVER MODULE (complete)	1044		SF	1,285	19.0	2.20	39,672	4593.6	2,683,080		2,181,960	243369	4865040	243369
	1	PIG RECEIVER MODULE (complete)	1292		SF	1,285	19.0	2.20	24,548	2842.4	1,660,220		1,350,140	150591	3010360	150591
SUB -TOTAL									2,088,223	241,884	141,141,830		114,780,710	12,802,286	256,922,540	12,802,286
		Design Development														
		Procurement Bump														
		Market Trend														
		Productivity Allowance														
		Allowance for unlisted items														
TOTAL MODULE WORKS		3X-XXX							2,088,223	241,884	141,141,830		114,780,710	12,802,286	256,922,540	12,802,286

G:\WAB\BPPrj\TIC_Estd 0 GPB_Est\3903 GPB Pig Launcher & Receiver Facilities\ROM TIC Option 1.XLS\3 MODULES

14/Mar/03

PROJECT: 125698
WP: 3903

BPXA-CEC00010762

MODULE INSTALLATION

PROJECT: GPB PIG L&R FACILITIES
CLIENT: BP EXPLORATION (ALASKA), INC.
LOCATION: PRUDHOE BAY, ALASKA
OPTION 1

Estimate No.: 3903 OPTION 1
Estimator: J.DIAMOND
Date: 13-Mar-03
Rev.: IFR b

Market Condition: 1.0
Fab Shop Prod.: 1.0
North Slope Prod.: 1.0

Labor Rates: ($/hr)
F/S: 95.00
N/S: 52.98

PIPING WORKS ESTIMATE WORKSHEET 5X-XXX			MTO QUANTITY		UOM	MATERIAL UNIT COST	MANHOURS (MH) UNIT		MANHOURS (MH) TOTAL		COST ($) MATERIAL		COST ($) LABOR		COST ($) TOTAL	
Code	Size	Description	F/Shop	N/Slope			F/S	N/S	F/S	N/S	F/S	N/S	F/S	N/S	F/S	N/S
		PIPING MODIFICATIONS														
600#																
	24"		36		EA	95,000	190	760	6840.0		3420000		376,200		3796200	
	30"		4		EA	176,000	360	1440	1440.0		704000		79,200		783200	
	34"		2		EA	213,000	430	1720	860.0		426000		47,300		473300	
900#																
	14"		2		EA	73,000	150	600	300.0		146000		16,500		162500	
	16"		16		EA	79,000	160	640	2560.0		1264000		140,800		1404800	
	18"		8		EA	96,000	200	800	1600.0		768000		88,000		856000	
	20"		2		EA	118,000	240	960	480.0		236000		26,400		262400	
	24"		10		EA	167,000	340	1360	3400.0		1670000		187,000		1857000	
1500#																
	12"		44		EA	62,000	130	520	5720.0		2728000		314,600		3042600	
	16"		6		EA	96,000	200	800	1200.0		576000		66,000		642000	
	24"		2		EA	195,000	390	1560	780.0		390000		42,900		432900	
2500#																
	8"		6		EA	53,000	110	440	660.0		318000		36,300		354300	
	12"		2		EA	95,000	200	800	400.0		190000		22,000		212000	
	24"		2		EA	295,000	590	2360	1180.0		590000		64,900		654900	

PROJECT: 125698
WP: 3903

BPXA-CEC00010763

MODULE INSTALLATION

PROJECT: GPB PIG L&R FACILITIES
CLIENT: BP EXPLORATION (ALASKA), INC.
LOCATION: PRUDHOE BAY, ALASKA
OPTION 1

Estimate No.: 3903 OPTION 1
Estimator: J.DIAMOND
Date: 13-Mar-03
Rev.: IFR b

Market Condition: 1.0
Fab Shop Prod.: 1.0
North Slope Prod.: 1.0

Labor Rates: ($/hr)
F/S: 95.00
N/S: 52.98

PIPING WORKS ESTIMATE WORKSHEET
5X-XXX

Code	Size	Description	MTO QUANTITY F/Shop	MTO QUANTITY N/Slope	UOM	MATERIAL UNIT COST	MANHOURS (MH) UNIT F/S	MANHOURS (MH) UNIT N/S	MANHOURS (MH) TOTAL F/S	MANHOURS (MH) TOTAL N/S	COST ($) MATERIAL F/S	COST ($) MATERIAL N/S	COST ($) LABOR F/S	COST ($) LABOR N/S	COST ($) TOTAL F/S	COST ($) TOTAL N/S
		SCAFFOLDING 2 10 0.5			Sections				10.00							
		SLIDE, SADDLE & SHOE ALLOW				3.00			17.0%							
		BLAST & PRIME ALLOW		n/a		0.3%	5.0%		5.0%							
		TESTING & INSPECTION ALLOW					20.0%		20.0%							
SUB -TOTAL									27420.0		13426000		1508100		14934100	
		Design Development														
		Procurement Bump														
		Market Trend														
		Productivity Allowance														
		Allowance for unlisted items														
TOTAL		5X-XXX							27420.0		13426000		1508100		14934100	

G:\VAB\BPProj\TIC_Est\4.0 GPB_Est\3903 GPB Pig Launcher & Receiver Facilities\ROM TIC Option 1.XLS]5 PIPE (1)

14/Mar/03

PROJECT: 125698
WP: 3903

BPXA-CEC00010764

7

GPB PIG LAUNCHER & RECEIVER FACILITIES
TIC Estimate Basis

OPTION II – PORTABLE SKID FACILITIES

1. Scope of Work

   This TIC Estimate is for costs associated with providing new pigging facilities at each end of seventy-one (71) existing lines identified for priority internal inspection coupled with portable pigging equipment. This estimate will provide the basis for future investment and design decisions. The major scope items include:
   - Gravel pad at each end of each pipeline.
   - New portable launcher and receiver skids to meet pipeline parameters.
   - Permanent tie-in points (bypass, block valve, completion flange etc.) for the portable launchers and receivers to the subject pipelines.

2. Cost Elements

   Rates for North Slope direct and indirect man-hours and staff, construction equipment, consumables, field wide indirects, material handling, freight, Design/Engineering and 3rd party contractors, and Unit Operator Cost are shown in Table 1-1. These are current average rates and fixed by BP.

3. Civil/Structural/Architectural Works

   Material, fabrication, and installation costs for the new skids are based upon BP historical data and budgetary quotations for the basic equipment assemblies. This data was scaled to meet the particulars for this project.

4. Piping Works

   Piping Works include new valving and connection points at the existing drop-out spool locations. Budgetary quotations were obtained for the major valves or extrapolated as necessary. The balance of the piping requirements were factored from the valve costs using BP historical data.

5. Electrical and Instrument Works

   There are no electrical or instrumentation requirements identified for this option.

6. Engineering

   Engineering and Design costs are based on a preliminary assessment by Estimating of the level of effort required. These costs include conceptual, preliminary, and detailed design. PHA review, BP Support (Project Control) Personnel, Staff allocations, construction support, and "as-built" drawings are included.

7. Escalation

   Costs used in this estimate are present day. No installation schedule has been established from which to base projected expenditures. Therefore no forward escalation is included.

8. Contingency

BPXA-CEC00010766

A contingency level of 25% was applied due to the early and conceptual nature of the project.

9. Assumptions and Exclusions

Detail Design will be performed in Anchorage by VECO Alaska, Inc. under the direction of a resident BP Project Lead.

There is adequate space and access to install permanent facilities (modules) at each end of each of the subject pipelines.

There is a drop-out spool existing at the point of connection for pigging facilities at each end of each of the subject pipelines.

Each of the subject pipelines is currently in a piggable condition. All changes of direction are of an acceptable radius to allow the passage of the intended "smart pigs".

All existing branch connections are accomplished with barred tees in the section of line between drop-out spools.

With the exception of tie-ins, all modifications to existing lines are specifically excluded from the scope of this estimate.

This estimate does not include costs for vendor development of non-standard items. It is assumed that all necessary materials (including launchers, receivers, valves, flanges, proprietary closures, 24"-2500# components, etc.) will be provided as standard supply.

Skids will be fabricated to a substantially complete status before delivery to the North Slope, including installation of equipment, valves and piping.

Piping will be fabricated into erection spools to the greatest extent practical.

Module and piping spool fabrication works will be competitively bid.

A North Slope contractor will perform the installation work under the Shared Services agreement.

The timing (schedule) for this work is unknown. Therefor forward escalation is excluded.

All materials incorporated into this project will be new and charged to this project.

Table 1-1 Project Cost Elements

Item	Cost Element	Basis	Comments & Assumptions
1.	N/S Composite Craft Labor Rate	$52.98/mh	Applied to all direct and indirect hours.
2.	N/S Staff Labor	$17.71/mh	Applied to total craft hours.
3.	Fab Shop Composite Labor Rate	$55.00/mh	Applied to total craft and staff hours.
4.	3rd Party Engineering (Survey, Geotech, etc.)	$53.00/mh	Applied to 9.0% of total N/S hours.
5.	3rd Party Contracting (FCO, SQS, Q/A, NDE)	$58.00/mh	Applied to 10.0% of F/S hours and 22.0% of N/S hours.
6.	Automation/Programming	$1500/day	As required for specific tasks.
7.	Anchorage Eng./Design	$75.00/mh	Applied as detailed on page 4 of the estimate, includes BP Support.
8.	N/S Eng./Design	$75.08/mh	Applied as necessary.
9.	Project Engineering (Anchorage based)	$840/day $1100/day	Applied to BP/VECO Leader. Applied to UOSS Leader.
10.	Construction Mgr./Eng.	incl.	Included with FWI.
11.	Construction Equipment	$5.00/mh $9.40/mh	Applied to total F/S hours. Applied to total N/S hours.
12.	Small Tools & Consumables	$2.50/mh	Applied to total N/S hours.
13.	Field Wide Indirects	$25.00/mh	Applied to total N/S hours.
14.	PHA	incl.	Included in engineering.
15.	As Built Drawings	7.5%	Added to Design/Drafting hours.
16.	Material Handling Allocation	6.0%	Applicable to all material costs
17.	Freight Allocation	10.0%	Applicable to all material costs
18.	Logistics	10.0%	Applied to fabrication costs with a $2000 minimum.
19.	Operations Support	5.0%	Applied to total costs.
20.	Unit Operator Cost	-	Allowance for discipline engineers for 1 day per site participation in meetings, research, etc..

BP EXPLORATION (ALASKA), INC. — **PRUDHOE BAY, ALASKA**

ESTIMATE TITLE:	**PORTABLE SKIDS**	Estimate Type:	**Appraisal**
Estimate #:	**3903 OPTION 2**	Estimate Accuracy:	**+/- 50%**
Project Name:	**GPB PIG L&R FACILITIES**	Project Leader:	**T. PINE**
	OPTION 2	Project Mgr./Eng.:	**R. WEDGE**
		Prepared By:	**J.DIAMOND**
ASSUME INSTALLATION WILL BE DONE BY SHARED SERVICES CONSTRUCTION GROUP		Date:	**13-Mar-2003**
2003 Year of Installation		Rev. No. :	**IFR b**

		Manhours		Costs				
Coding Account	Description	Fab. Site	N.S. Contr.	Fab. Material	N.S. Material	Fab.	Inst'l	Total
0x-xxx	CIVIL WORKS				483,865			483,865
1x-xxx	CONCRETE WORKS							
2x-xxx	STRUCTURAL WORKS							
3x-xxx	SKIDS			19,207,000				19,207,000
4x-xxx	MAJOR EQUIPMENT							
5x-xxx	PIPING WORKS SUMMARY	53189	237,216	33,961,226		2,925,395	12,567,709	49,454,330
6x-xxx	ELECTRICAL WORKS							
7x-xxx	INSTRUMENTATION WORKS							
8x-xxx	PROTECTIVE COATING WORKS							
	TOOLS & EQUIPMENT				2,390,500			2,390,500
	Subtotal Direct Craft	53,189	237,216			2,925,395	12,567,709	15,493,104
	Indirect Craft Labor	5,851	83,026			321,810	4,398,700	4,720,510
	Subtotal	**59,040**	**320,242**	**53,168,226**	**2,874,365**	**3,247,205**	**16,966,409**	**76,256,205**
	Contractor Staff	14170				779,350	5,671,480	6,450,830
	Construction Equipment					295,200	3,010,270	3,305,470
	Survey, Geotech, Other 3rd Party		28,822				1,527,550	1,527,550
(Pg. 4, Item B)	FCO, SQS, Q/A, NDE, & Automatic	5904	70,453			342,430	4,100,650	4,443,080
	Subtotal	79,114	419,516	53,168,226	2,874,365	4,664,185	31,276,359	91,983,135
(Pg. 4, Item E)	Freight			5,316,820	287,440			5,604,260
(Pg. 4, Item E)	Material Handling			3,190,090	172,460			3,362,550
(Pg. 4, Item E)	Small Tools & Consumables				1,048,790			1,048,790
(Pg. 4, Item E)	Fieldwide Indirects						10,487,910	10,487,910
(Pg. 4, Item C)	Other Indirect Cost (Anch.)						198,000	198,000
	SUBTOTAL	**79,114**	**419,516**	**61,675,136**	**4,383,055**	**4,664,185**	**41,962,269**	**112,684,645**
	Logistics (Transportation)							**3,266,420**
(Pg. 4, Item A)	Detail Design/Engineering							**9,873,800**
(Pg. 4, Item A)	Conc. & Prelim. Design/Engineering							**9,825,000**
(Pg. 4, Item A)	'As-Built' Drawings							**709,510**
(Pg. 4, Item D)	Unit Operator Cost (Anchorage)							**59,640**
(Pg. 4, Item D)	Unit Operator Cost (North Slope)							
	Operations Support	5.0%						**6,820,950**
	Permitting	426,000	Allowance for up to three permits per site at $1000/each.					**426,000**
	Forward Escalation							
	Subtotal							**143,665,966**
	Contingency @	25.0%						**35,916,034**
	TOTAL							**179,582,000**

ASSUMPTIONS AND QUALIFICATIONS:

1. The composite labor rates used in preparing this estimate are as follows:

N/S Contractor Labor Rate Used:	$52.98/mh)	apply to all direct and indirect manhours			
N/S Contractor Staff Rate Used:	$17.71/mh				
Survey, Geotech, Other 3rd Party	$53.00/mh	apply to	9.0%	of total N/S mh	
FCO, SQS, Q/A, NDE	$58.00/mh	apply to	22.0%	of N/S mh,	10.0% of F/S mh
Automation/PLC Programming:	$1,500/day				
Offsite Fabrication Contractor:	$55.00/mh	apply to fab site direct craft, indirect craft, & staff			
Anchorage Design/Drafting:	$75.00/mh				
North Slope Design/Drafting:	$75.08/mh				
Anch. Project Engr'g:	$840/day				
Const. Mgr. / Engr.:					
Equipment Rate Used:	$9.40/tmh (field)	$5.00/tmh (shop)			

2. The basis for allocation rates used in preparing this estimate are as follows:

Fieldwide Indirects:	$25.00/mh	(GPB Project)
Small Tools & Consumables:	$2.50/mh	
Mat'l. Handling:	6.00%	LS
Freight:	10.00%	LS

3. Work will be performed by a N.S. Project Construction Group contractor.

4. Indirect Labor(Craft):

	Percent	Mhr
Cleanup	1.62%	3854
Scaffold	5.56%	13200
Mob/Demob	5.95%	14124
Firewatch/Safety	1.41%	3353
Standby Time	0.78%	1848
*Temporary Construction	0.19%	449
**Unallocable labor	5.76%	13675
Equipment Support Labor	13.71%	32524
Field Admin		
N/S Subtotal	35.00%	83,026
Fab site	11%	(applied to total direct manhours)

* Include Snow Removal & Ice Roads
**(i.e., expediters, mat'l handlers)

5. Indirect Labor(Staff):
(Direct + Indirect Craft Factor)

N/S Staff		(included)
Fab Shop Staff	24%	

AFE FORMAT BREAKDOWN:

CATEGORY:	ESTIMATE $
ENGINEERING	20,408,310
MATERIALS	69,324,611
FABRICATION	4,664,185
INSTALLATION	37,861,619
UNIT OPERATOR COST	59,640
OPERATIONS SUPPORT	6,820,950
FCO, SQS, Q/A, NDE	4,100,650
PERMITTING	426,000
ESCALATION	
CONTINGENCY	35,916,034
TOTAL	179,582,000

ENGINEERING & UNIT OPERATOR COST

	Qty.	Unit	Rate	Total Cost	
A. ENGINEERING					
Anchorage Design/Drafting	126,000	Hours	75.00	9,450,000	
North Slope Design/Drafting		Hours	75.08		
Conc. & Prelim. Design/Drafting	131,000	Hours	75.00	9,825,000	
Other 3rd Party Engineering		Hours	90.00		
Const. Suppt./Close Out	6,300	Hours	67.27	423,800	(allowance at 5.0% of Design/Drafting hours)
'As-Built' Drawings	9,450	Hours	75.08	709,510	(allowance at 7.5% of Design/Drafting hours)
SUB TOTAL ENGINEERING	272,750	Hours		20,408,310	
B. OTHER INDIRECT COST					
Supplier Quality Surveillance	0.50%			14,370	
Automation/PLC Programming		Days	1,500		
SUB TOTAL OTHER INDIRECT				14,370	
C. OTHER INDIRECT COST (ANCHORAGE)					
Project Cost Control	(incl. W/ Eng'g.	Hours	75.00		
Contr. Project Engineering - VECO		Days	840		
Contr. Project Engineering - UOSS	180	Days	1,100	198,000	
SUB TOTAL OTHER INDIRECT (ANCHORAGE)				198,000	
D. UNIT OPERATOR COSTS					
BPX Project Engineering		Days	840		
Discipline / Facility Engineering	71	Days	840	59,640	
Construction Superintendent		Hours			(incl. w/FW)
SUB TOTAL UNIT OPERATOR COST				59,640	

E. ALLOCATIONS	Rate		Material Basis	Manhour Basis	Material Allocation	Labor Allocation
Fieldwide Indirects - N/S	25	$/mh		419,516		10,487,910
Small Tools & Consumables - N/S	2.5	$/mh		419,516	1,048,790	
Material Handling * - Fab Sh	6%		53,168,226		3,190,090	
- North Slope	6%		2,874,365		172,460	
Freight - Fab	10%		53,168,226		5,316,820	
- North Slope	10%		2,874,365		287,440	
* To a maximum mat'l handling expenditure of $50,000/item						
SUB TOTAL ALLOCATIONS					10,015,600	10,487,910

PORTABLE SKIDS

PROJECT: GPB PIG L&R FACILITIES
CLIENT: BP EXPLORATION (ALASKA), INC.
LOCATION: PRUDHOE BAY, ALASKA
OPTION 2

Estimate No.: 3903 OPTION 2
Estimator: J.DIAMOND
Date: 13-Mar-03
Rev.: IFR b

Market Condition: 1.0
Fab Shop Prod.: 1.0
North Slope Prod.: 1.0

Labor Rates: ($/hr)
F/S: 65.00
N/S: 92.00

CIVIL WORKS ESTIMATE WORKSHEET 0X-XXX				MTO QUANTITY		UOM	MATERIAL UNIT COST	MANHOURS (MH) UNIT		MANHOURS (MH) TOTAL		COST ($) MATERIAL		COST ($) LABOR		COST ($) TOTAL	
Code	Size	Description		F/S	N/S			F/S	N/S	F/S	N/S	F/S	N/S	F/S	N/S	F/S	N/S
NEW GRAVEL PAD																	
		l	w	d													
CY EACH	58	25	3		161	CY EA											
TOTAL CY (includes fee) for 142 sites					22,878	CY	20.00						457,556				457556
GRAVEL HAUL																	
Avg. of 5 mi			$1.15										26,309				26309
SUB -TOTAL																	
Design Development													483,865				483,865
Procurement Bump																	
Market Trend																	
Productivity Allowance																	
Allowance for unlisted items																	
TOTAL CIVIL WORKS					0X-XXX								483,865				483,865

G:\VAB\BPProj\TIC_Est\4.0 GPB_Est\3903 GPB Pig Launcher & Receiver Facilities\[ROM TIC Option 2.XLS]0 CIVIL

14/Mar/03

PROJECT: 125698
WP: 3903

BPXA-CEC00010772

PORTABLE SKIDS

PROJECT: GPB PIG L&R FACILITIES
CLIENT: BP EXPLORATION (ALASKA), INC.
LOCATION: PRUDHOE BAY, ALASKA
OPTION 2

Estimate No.: 3903 OPTION 2
Estimator: J.DIAMOND
Date: 13-Mar-03
Rev.: IFR b

Market Condition: 1.00
Fab Shop Prod.: 1.0
North Slope Prod.: 1.0

Labor Rates: ($/hr)
F/S: 55.00
N/S: 52.00

ARCHITECTURAL/BUILDING WORKS ESTIMATE WORKSHEET
3X-XXX

Code	Size	Description		MTO QUANTITY F/S	MTO QUANTITY N/S	UOM	MATERIAL UNIT COST	MANHOURS (MH) UNIT F/S	MANHOURS (MH) UNIT N/S	MANHOURS (MH) TOTAL F/S	MANHOURS (MH) TOTAL N/S	COST ($) MATERIAL F/S	COST ($) MATERIAL N/S	COST ($) LABOR F/S	COST ($) LABOR N/S	COST ($) TOTAL F/S	COST ($) TOTAL N/S
		PORTABLE LAUNCHER SKID (complete) for	24" 600#	1		EA	462,000					462,000				462000	
		PORTABLE LAUNCHER SKID (complete) for	30" 600#	1		EA	682,000					682,000				682000	
		PORTABLE LAUNCHER SKID (complete) for	34" 600#	1		EA	990,000					990,000				990000	
		PORTABLE LAUNCHER SKID (complete) for	14" 900#	1		EA	300,000					300,000				300000	
		PORTABLE LAUNCHER SKID (complete) for	16" 900#	1		EA	390,000					390,000				390000	
		PORTABLE LAUNCHER SKID (complete) for	18" 900#	1		EA	461,000					461,000				461000	
		PORTABLE LAUNCHER SKID (complete) for	20" 900#	1		EA	589,000					589,000				589000	
		PORTABLE LAUNCHER SKID (complete) for	24" 900#	1		EA	763,000					763,000				763000	
		PORTABLE LAUNCHER SKID (complete) for	12" 1500#	1		EA	376,000					376,000				376000	
		PORTABLE LAUNCHER SKID (complete) for	16" 1500#	1		EA	526,000					526,000				526000	
		PORTABLE LAUNCHER SKID (complete) for	24" 1500#	1		EA	1,029,000					1,029,000				1029000	
		PORTABLE LAUNCHER SKID (complete) for	8" 2500#	1		EA	404,000					404,000				404000	
		PORTABLE LAUNCHER SKID (complete) for	12" 2500#	1		EA	564,000					564,000				564000	
		PORTABLE LAUNCHER SKID (complete) for	24" 2500#	1		EA	1,544,000					1,544,000				1544000	
		PORTABLE RECEIVER SKID (complete) for	24" 600#	1		EA	511,000					511,000				511000	
		PORTABLE RECEIVER SKID (complete) for	30" 600#	1		EA	764,000					764,000				764000	
		PORTABLE RECEIVER SKID (complete) for	34" 600#	1		EA	1,117,000					1,117,000				1117000	
		PORTABLE RECEIVER SKID (complete) for	14" 900#	1		EA	347,000					347,000				347000	
		PORTABLE RECEIVER SKID (complete) for	16" 900#	1		EA	449,000					449,000				449000	
		PORTABLE RECEIVER SKID (complete) for	18" 900#	1		EA	508,000					508,000				508000	
		PORTABLE RECEIVER SKID (complete) for	20" 900#	1		EA	597,000					597,000				597000	
		PORTABLE RECEIVER SKID (complete) for	24" 900#	1		EA	843,000					843,000				843000	
		PORTABLE RECEIVER SKID (complete) for	12" 1500#	1		EA	432,000					432,000				432000	
		PORTABLE RECEIVER SKID (complete) for	16" 1500#	1		EA	607,000					607,000				607000	
		PORTABLE RECEIVER SKID (complete) for	24" 1500#	1		EA	1,137,000					1,137,000				1137000	
		PORTABLE RECEIVER SKID (complete) for	8" 2500#	1		EA	462,000					462,000				462000	
		PORTABLE RECEIVER SKID (complete) for	12" 2500#	1		EA	647,000					647,000				647000	
		PORTABLE RECEIVER SKID (complete) for	24" 2500#	1		EA	1,706,000					1,706,000				1706000	
SUB -TOTAL				28								19,207,000				19207000	
		Design Development															
		Procurement Bump															
		Market Trend															
		Productivity Allowance															
		Allowance for unlisted items															
TOTAL	SKIDS		3X-XXX									19,207,000				19207000	

G:\WASBP\Proj\TIC_Est\4.0 GPB_Est\3903 GPB Pig Launcher & Receiver Facilities\[ROM TIC Option 2.XLS]3 SKIDS

14/Mar/03

PROJECT: 125698
WP: 3903

BPXA-CEC00010773

PORTABLE SKIDS

PROJECT: GPB PIG L&R FACILITIES
CLIENT: BP EXPLORATION (ALASKA), INC.
LOCATION: PRUDHOE BAY, ALASKA
OPTION 2

Estimate No.: 3903 OPTION 2
Estimator: J.DIAMOND
Date: 13-Mar-03
Rev.: IFR b

Market Condition: 1.0
Fab Shop Prod.: 1.0
North Slope Prod.: 1.0

Labor Rates: ($/hr)
F/S: 66.03
N/S: 62.98

PIPING WORKS ESTIMATE WORKSHEET
5X-XXX

Code	Size	Description	MTO QUANTITY F/Shop	MTO QUANTITY N/Slope	UOM	MATERIAL UNIT COST	MANHOURS (MH) UNIT F/S	MANHOURS (MH) UNIT N/S	MANHOURS (MH) TOTAL F/S	MANHOURS (MH) TOTAL N/S	COST ($) MATERIAL F/S	COST ($) MATERIAL N/S	COST ($) LABOR F/S	COST ($) LABOR N/S	COST ($) TOTAL F/S	COST ($) TOTAL N/S
		PIPING MODIFICATIONS														
600#																
	24"		36		EA	217,850	360	1440	12960	51840	7842600		712,800	2746484	8555400	2746484
	30"		4		EA	410,300	660	2640	2640	10560	1641200		145,200	559469	1786400	559469
	34"		2		EA	492,500	800	3200	1600	6400	985000		88,000	339072	1073000	339072
900#																
	14"		2		EA	166,200	270	1080	540	2160	332400		29,700	114437	362100	114437
	16"		16		EA	177,900	290	1160	4640	18560	2846400		255,200	983309	3101600	983309
	18"		8		EA	216,800	360	1440	2880	11520	1734400		158,400	610330	1892800	610330
	20"		2		EA	269,000	440	1760	880	3520	538000		48,400	186490	586400	186490
	24"		10		EA	383,100	620	2480	6200	24800	3831000		341,000	1313904	4172000	1313904
1500#																
	12"		44		EA	131,600	220	880	9680	38720	5790400		532,400	2051386	6322800	2051386
	16"		6		EA	213,100	350	1400	2100	8400	1278600		115,500	445032	1394100	445032
	24"		2		EA	441,300	720	2880	1440	5760	882600		79,200	305165	961800	305165
2500#																
	8"		6		EA	102,020	170	680	1020	4080	612120		56,100	216159	668220	216159
	12"		2		EA	201,800	340	1360	680	2720	403600		37,400	144106	441000	144106
	24"		2		EA	667,100	1080	4320	2160	8640	1334200		118,800	457748	1453000	457748
			142													

PROJECT: 125698
WP: 3903

BPXA-CEC00010774

PORTABLE SKIDS

PROJECT: GPB PIG L&R FACILITIES
CLIENT: BP EXPLORATION (ALASKA), INC.
LOCATION: PRUDHOE BAY, ALASKA
OPTION 2

Estimate No.: 3903 OPTION 2
Estimator: J.DIAMOND
Date: 13-Mar-03
Rev.: IFR b

Market Condition: 1.0
Fab Shop Prod.: 1.0
North Slope Prod.: 1.0

Labor Rates: ($/hr)
F/S: 50.00
N/S: 52.86

PIPING WORKS ESTIMATE WORKSHEET
SX-XXX

Code	Size	Description	MTO QUANTITY F/Shop	MTO QUANTITY N/Slope	UOM	MATERIAL UNIT COST	MANHOURS (MH) UNIT F/S	MANHOURS (MH) UNIT N/S	MANHOURS (MH) TOTAL F/S	MANHOURS (MH) TOTAL N/S	COST ($) MATERIAL F/S	COST ($) MATERIAL N/S	COST ($) LABOR F/S	COST ($) LABOR N/S	COST ($) TOTAL F/S	COST ($) TOTAL N/S
		SCAFFOLDING 2 10 0.5			Sections			10.00								
		SLIDE, SADDLE & SHOE ALLOW				3.00		17.0%								
		BLAST & PRIME ALLOW		n/a		0.3%	5.0%	5.0%								
		TESTING & INSPECTION ALLOW		1			20.0%	20.0%		39246.0				2094618		2094618
SUB -TOTAL									49420.0	237216.0	30062520		2718100	12567709	32770620	12567709
		Design Development							2491.0		1502626		135,906		1638531	
		Procurement Bump									1577757				1577757	
		Market Trend														
		Productivity Allowance														
		Allowance for unlisted items							1289.0		828323		71,390		899713	
TOTAL		SX-XXX							53199.0	237216.0	33961226		2925395	12567709	38886621	12567709

G:\MUNIPPrep\TIC_Est\4 GPB_Est\3903 GPB Pig Launcher & Receiver Facilities\ROM TIC Option 3.XLS]5 PIPE (1)

14/Mar/03

PROJECT: 125698
WP: 3903

BPXA-CEC00010775

PORTABLE SKIDS

PROJECT: GPB PIG L&R FACILITIES
CLIENT: BP EXPLORATION (ALASKA), INC.
LOCATION: PRUDHOE BAY, ALASKA
OPTION 2

Estimate No.: 3903 OPTION 2
Estimator: J.DIAMOND
Date: 13-Mar-03
Rev.: IFR b

Market Condition: 1.0
Fab Shop Prod.: 1.0
North Slope Prod.: 1.0

Labor Rates: ($/hr) F/S: N/S:

EQUIPMENT ESTIMATE WORKSHEET
9X-XXX

Code	Size	Description	MTO QUANTITY F/S	MTO QUANTITY N/S	UOM	MATERIAL UNIT COST	MANHOURS (MH) UNIT F/S	MANHOURS (MH) UNIT N/S	MANHOURS (MH) TOTAL F/S	MANHOURS (MH) TOTAL N/S	COST ($) MATERIAL F/S	COST ($) MATERIAL N/S	COST ($) LABOR F/S	COST ($) LABOR N/S	COST ($) TOTAL F/S	COST ($) TOTAL N/S
		"ROLLING STOCK"														
		Vacuum Truck		1	EA	360,000						360000				360000
		Flatbed Truck		1	EA	44,000						44000				44000
		Hydro Crane		1	EA	410,000						410000				410000
		Boom Truck		2	EA	173,000						346000				346000
		Low-Boy Trailer		2	EA	80,000						160000				160000
		Tractor		2	EA	135,000						270000				270000
		SUPPORT EQUIPMENT														
		Air Compressor		2	EA	112,000						224000				224000
		Light Plant		4	EA	20,000						80000				80000
		Gen Set		1	EA	26,000						26000				26000
		Space Heaters		1	EA	37,500						37500				37500
		Shelter / Field Office		1	EA	29,000						29000				29000
		Transfer Pump		1	EA	20,000						20000				20000
		"Tiger" Tanks		2	EA	102,000						204000				204000
		TOOLS & SUPPLIES														
		Initial set-up per crew		2	LOT	90,000						180000				180000
SUB -TOTAL												2390500				2390500
TOTAL		TOOLS & EQUIPMENT 9X-XXX										2390500				2390500

G:\WAB\BPProj\TIC_Est\4.0 GPB_Est\3903 GPB Pig Launcher & Receiver Facilities\ROM TIC Option 2.XLS]9 TOOLS & EQUIP

14/Mar/03

PROJECT: 125698
WP: 3903

BPXA-CEC00010776

8

GPB PIG LAUNCHER & RECEIVER FACILITIES
TIC Estimate Basis

OPTION III – TEMPORARY COMPONENT FACILITIES

1. Scope of Work

   This TIC Estimate is for costs associated with providing new pigging facilities at each end of seventy-one (71) existing lines identified for priority internal inspection coupled with portable temporary pigging assemblies. This estimate will provide the basis for future investment and design decisions. The major scope items include:

   - Gravel pad at each end of each pipeline.
   - New portable launcher and receiver components to be assembled as required to meet a particular pipeline's parameters.
   - Permanent tie-in points (bypass, block valve, completion flange etc.) for the connection of the portable temporary launcher and receiver assemblies to the subject pipelines.

2. Cost Elements

   Rates for North Slope direct and indirect man-hours and staff, construction equipment, consumables, field wide indirects, material handling, freight, Design/Engineering and 3rd party contractors, and Unit Operator Cost are shown in Table 1-1. These are current average rates and fixed by BP.

3. Civil/Structural/Architectural Works

   Gravel costs are derived from BP historical data.
   Material, fabrication, and installation costs for the "cradles" are based upon BP historical data and budgetary quotation information for the basic equipment assemblies. This data was scaled to meet the particulars for this project.

4. Piping Works

   Piping Works include new valving and connection points at the existing drop-out spool locations. Budgetary quotations were obtained for the major valves or extrapolated as necessary. The balance of the piping requirements were factored from the valve costs using BP historical data.

5. Electrical and Instrument Works

   There are no electrical or instrumentation requirements identified for this option.

6. Engineering

   Engineering and Design costs are based on a preliminary assessment by Estimating of the level of effort required. These costs include conceptual, preliminary, and detailed design. PHA review, BP Support (Project Control) Personnel, Staff allocations, construction support, and "as-built" drawings are included.

7. Escalation

BPXA-CEC00010778

Costs used in this estimate are present day. No installation schedule has been established from which to base projected expenditures. Therefore no forward escalation is included.

8. Contingency

   A contingency level of 25% was applied due to the early and conceptual nature of the project.

9. Assumptions and Exclusions

   Detail Design will be performed in Anchorage by VECO Alaska, Inc. under the direction of a resident BP Project Lead.
   There is adequate space and access to install permanent facilities (modules) at each end of each of the subject pipelines.
   There is a drop-out spool existing at the point of connection for pigging facilities at each end of each of the subject pipelines.
   Each of the subject pipelines is currently in a piggable condition. All changes of direction are of an acceptable radius to allow the passage of the intended "smart pigs".
   All existing branch connections are accomplished with barred tees in the section of line between drop-out spools.
   With the exception of tie-ins, all modifications to existing lines are specifically excluded from the scope of this estimate.
   This estimate does not include costs for vendor development of non-standard items. It is assumed that all necessary materials (including launchers, receivers, valves, flanges, proprietary closures, 24"-2500# components, etc.) will be provided as standard supply.
   Piping will be fabricated into erection spools to the greatest extent practical.
   "Cradle" and piping spool fabrication works will be competitively bid.
   A North Slope contractor will perform the installation work under the Shared Services agreement.
   The timing (schedule) for this work is unknown. Therefor forward escalation is excluded.
   All materials incorporated into this project will be new and charged to this project.

BPXA-CEC00010779

Table 1-1 Project Cost Elements

Item	Cost Element	Basis	Comments & Assumptions
1.	N/S Composite Craft Labor Rate	$52.98/mh	Applied to all direct and indirect hours.
2.	N/S Staff Labor	$17.71/mh	Applied to total craft hours.
3.	Fab Shop Composite Labor Rate	$55.00/mh	Applied to total craft and staff hours.
4.	3rd Party Engineering (Survey, Geotech, etc.)	$53.00/mh	Applied to 9.0% of total N/S hours.
5.	3rd Party Contracting (FCO, SQS, Q/A, NDE)	$58.00/mh	Applied to 10.0% of F/S hours and 22.0% of N/S hours.
6.	Automation/Programming	$1500/day	As required for specific tasks.
7.	Anchorage Eng./Design	$75.00/mh	Applied as detailed on page 4 of the estimate, includes BP Support.
8.	N/S Eng./Design	$75.08/mh	Applied as necessary.
9.	Project Engineering (Anchorage based)	$840/day $1100/day	Applied to BP/VECO Leader. Applied to UOSS Leader.
10.	Construction Mgr./Eng.	incl.	Included with FWI.
11.	Construction Equipment	$5.00/mh $9.40/mh	Applied to total F/S hours. Applied to total N/S hours.
12.	Small Tools & Consumables	$2.50/mh	Applied to total N/S hours.
13.	Field Wide Indirects	$25.00/mh	Applied to total N/S hours.
14.	PHA	incl.	Included in engineering.
15.	As Built Drawings	7.5%	Added to Design/Drafting hours.
16.	Material Handling Allocation	6.0%	Applicable to all material costs
17.	Freight Allocation	10.0%	Applicable to all material costs
18.	Logistics	10.0%	Applied to fabrication costs with a $2000 minimum.
19.	Operations Support	5.0%	Applied to total costs.
20.	Unit Operator Cost	-	Allowance for discipline engineers for 1 day per site participation in meetings, research, etc..

BP EXPLORATION (ALASKA), INC.

PRUDHOE BAY, ALASKA

ESTIMATE TITLE:	TEMPORARY COMPONENT FACILITIES	Estimate Type:	Appraisal
Estimate #:	3903 OPTION 3	Estimate Accuracy:	+/- 50%
Project Name:	GPB PIG L&R FACILITIES	Project Leader:	T. PINE
	OPTION 3	Project Mgr./Eng.:	R. WEDGE
		Prepared By:	J.DIAMOND
ASSUME INSTALLATION WILL BE DONE BY SHARED SERVICES CONSTRUCTION GROUP		Date:	14-Mar-2003
2003 Year of Installation		Rev. No. :	IFR a

Coding Account	Description	Manhours Fab. Site	Manhours N.S. Contr.	Costs Fab. Material	Costs N.S. Material	Costs Fab.	Costs Inst'l	Costs Total
0x-xxx	CIVIL WORKS				483,865			483,865
1x-xxx	CONCRETE WORKS							
2x-xxx	STRUCTURAL WORKS			1,841,300				1,841,300
3x-xxx	BUILDINGS							
4x-xxx	MAJOR EQUIPMENT				1,061,490			1,061,490
5x-xxx	PIPING WORKS SUMMARY	54764	237,216	39,869,888		3,012,020	12,567,709	55,449,617
6x-xxx	ELECTRICAL WORKS							
7x-xxx	INSTRUMENTATION WORKS							
8x-xxx	PROTECTIVE COATING WORKS							
	TOOLS & EQUIPMENT				2,390,500			2,390,500
	Subtotal Direct Craft	54,764	237,216			3,012,020	12,567,709	15,579,729
	Indirect Craft Labor	6,024	83,026			331,320	4,398,700	4,730,020
	Subtotal	**60,788**	**320,242**	**41,711,188**	**3,935,855**	**3,343,340**	**16,966,409**	**65,956,792**
	Contractor Staff	14589				802,400	5,671,480	6,473,880
	Construction Equipment					303,940	3,010,270	3,314,210
	Survey, Geotech, Other 3rd Party		28,822				1,527,550	1,527,550
(Pg. 4, Item B)	FCO, SQS, Q/A, NDE, & Automatic	6078.8	70,453			352,570	4,105,960	4,458,530
	Subtotal	81,456	419,516	41,711,188	3,935,855	4,802,250	31,281,669	81,730,962
(Pg. 4, Item E)	Freight			4,171,120	393,590			4,564,710
(Pg. 4, Item E)	Material Handling			2,502,670	236,150			2,738,820
(Pg. 4, Item E)	Small Tools & Consumables				1,048,790			1,048,790
(Pg. 4, Item E)	Fieldwide Indirects						10,487,910	10,487,910
(Pg. 4, Item C)	Other Indirect Cost (Anch.)						198,000	198,000
	SUBTOTAL	**81,456**	**419,516**	**48,384,978**	**5,614,385**	**4,802,250**	**41,967,579**	**100,769,192**
	Logistics (Transportation)							**3,280,230**
(Pg. 4, Item A)	Detail Design/Engineering							**9,873,800**
(Pg. 4, Item A)	Preliminary Design/Engineering							**9,825,000**
(Pg. 4, Item A)	'As-Built' Drawings							**709,510**
(Pg. 4, Item D)	Unit Operator Cost (Anchorage)							**8,400**
(Pg. 4, Item D)	Unit Operator Cost (North Slope)							
	Operations Support	5.0%						**6,223,310**
	Permitting	426,000	Allowance for up to three permits per site at $1000/each.					**426,000**
	Forward Escalation							
	Subtotal							**131,115,443**
	Contingency @	25.0%						**32,778,557**
	TOTAL							**163,894,000**

ASSUMPTIONS AND QUALIFICATIONS:

1. The composite labor rates used in preparing this estimate are as follows:

N/S Contractor Labor Rate Used:	$52.98/mh)	apply to all direct and indirect manhours			
N/S Contractor Staff Rate Used:	$17.71/mh				
Survey, Geotech, Other 3rd Party	$53.00/mh	apply to	9.0%	of total N/S mh	
FCO, SQS, Q/A, NDE	$58.00/mh	apply to	22.0%	of N/S mh,	10.0% of F/S mh
Automation/PLC Programming:	$1,500/day				
Offsite Fabrication Contractor:	$55.00/mh	apply to fab site direct craft, indirect craft, & staff			
Anchorage Design/Drafting:	$75.00/mh				
North Slope Design/Drafting:	$75.08/mh				
Anch. Project Engr'g:	$840/day				
Const. Mgr. / Engr.:					
Equipment Rate Used:	$9.40/tmh (field)	$5.00/tmh (shop)			

2. The basis for allocation rates used in preparing this estimate are as follows:

Fieldwide Indirects:	$25.00/mh	(GPB Project)
Small Tools & Consumables:	$2.50/mh	
Mat'l. Handling:	6.00%	LS
Freight:	10.00%	LS

3. Work will be performed by a N.S. Project Construction Group contractor.

4. Indirect Labor(Craft):

	Percent	Mhr
Cleanup	1.62%	3854
Scaffold	5.56%	13200
Mob/Demob	5.95%	14124
Firewatch/Safety	1.41%	3353
Standby Time	0.78%	1848
*Temporary Construction	0.19%	449
**Unallocable labor	5.76%	13675
Equipment Support Labor	13.71%	32524
Field Admin		
N/S Subtotal	35.00%	83,026
Fab site	11%	(applied to total direct manhours)

* Include Snow Removal & Ice Roads
**(i.e., expediters, mat'l handlers)

5. Indirect Labor(Staff):
(Direct + Indirect Craft Factor)

N/S Staff		(included)
Fab Shop Staff	24%	

AFE FORMAT BREAKDOWN:

CATEGORY:	ESTIMATE $
ENGINEERING	20,408,310
MATERIALS	57,279,593
FABRICATION	4,802,250
INSTALLATION	37,861,619
UNIT OPERATOR COST	8,400
OPERATIONS SUPPORT	6,223,310
FCO, SQS, Q/A, NDE	4,105,960
PERMITTING	426,000
ESCALATION	
CONTINGENCY	32,778,557
TOTAL	163,894,000

ENGINEERING & UNIT OPERATOR COST

	Qty.	Unit	Rate	Total Cost	
A. ENGINEERING					
Anchorage Design/Drafting	126,000	Hours	75.00	9,450,000	
North Slope Design/Drafting		Hours	75.08		
Preliminary Design/Drafting	131,000	Hours	75.00	9,825,000	
Other 3rd Party Engineering		Hours	90.00		
Const. Suppt./Close Out	6,300	Hours	67.27	423,800	(allowance at 5.0% of Design/Drafting hours)
'As-Built' Drawings	9,450	Hours	75.08	709,510	(allowance at 7.5% of Design/Drafting hours)
SUB TOTAL ENGINEERING	272,750	Hours		20,408,310	
B. OTHER INDIRECT COST					
Supplier Quality Surveillance	0.50%			19,680	
Automation/PLC Programming		Days	1,500		
SUB TOTAL OTHER INDIRECT				19,680	
C. OTHER INDIRECT COST (ANCHORAGE)					
Project Cost Control	(incl. W/ Eng'g.	Hours	75.00		
Contr. Project Engineering - VECO		Days	840		
Contr. Project Engineering - UOSS	180	Days	1,100	198,000	
SUB TOTAL OTHER INDIRECT (ANCHORAGE)				198,000	
D. UNIT OPERATOR COSTS					
BPX Project Engineering		Days	840		
Discipline / Facility Engineering	10	Days	840	8,400	
Construction Superintendent		Hours			(incl. w/FWI)
SUB TOTAL UNIT OPERATOR COST				8,400	

E. ALLOCATIONS	Rate		Material Basis	Manhour Basis	Material Allocation	Labor Allocation
Fieldwide Indirects - N/S	25	$/mh		419,516		10,487,910
Small Tools & Consumables - N/S	2.5	$/mh		419,516	1,048,790	
Material Handling * - Fab Sh	6%		41,711,188		2,502,670	
- North Slope	6%		3,935,855		236,150	
Freight - Fab	10%		41,711,188		4,171,120	
- North Slope	10%		3,935,855		393,590	
* To a maximum mat'l handling expenditure of $50,000/item						
SUB TOTAL ALLOCATIONS					8,352,320	10,487,910

TEMPORARY COMPONENT FACILITIES

PROJECT: GPB PIG L&R FACILITIES
CLIENT: BP EXPLORATION (ALASKA), INC.
LOCATION: PRUDHOE BAY, ALASKA
OPTION 3

Estimate No.: 3903 OPTION 3
Estimator: J.DIAMOND
Date: 14-Mar-03
Rev.: IFR a

Market Condition: 1.0
Fab Shop Prod.: 1.0
North Slope Prod.: 1.0

Labor Rates: ($/hr)
F/S: 96.00
N/S: 52.38

CIVIL WORKS ESTIMATE WORKSHEET
0X-XXX

Code	Size	Description	MTO QUANTITY F/S	MTO QUANTITY N/S	UOM	MATERIAL UNIT COST	MANHOURS (MH) UNIT F/S	MANHOURS (MH) UNIT N/S	MANHOURS (MH) TOTAL F/S	MANHOURS (MH) TOTAL N/S	COST ($) MATERIAL F/S	COST ($) MATERIAL N/S	COST ($) LABOR F/S	COST ($) LABOR N/S	COST ($) TOTAL F/S	COST ($) TOTAL N/S
		NEW GRAVEL PAD														
		l w d														
		CY EACH 58 25 3		161	CY EA											
		TOTAL CY (includes fee) for 142 sites		22,878	CY	20.00						457,556				457556
		GRAVEL HAUL														
		Avg. of 5 mi $1.15										26,309				26309
SUB -TOTAL												483,865				483,865
		Design Development														
		Procurement Bump														
		Market Trend														
		Productivity Allowance														
		Allowance for unlisted items														
TOTAL		CIVIL WORKS 0X-XXX										483,865				483,865

G:\ABNBPProj\TIC_EstM.0 GPB_Est3903 GPB Pig Launcher & Receiver Facilities\ROM TIC Option 3 XLS]0 CIVIL

14/Mar/03

PROJECT: 125698
WP: 3903

BPXA-CEC00010784

TEMPORARY COMPONENT FACILITIES

PROJECT: GPB PIG L&R FACILITIES
CLIENT: BP EXPLORATION (ALASKA), INC.
LOCATION: PRUDHOE BAY, ALASKA
OPTION 3

Estimate No.: 3903 OPTION 3
Estimator: J.DIAMOND
Date: 14-Mar-03
Rev.: IFR a

Market Condition: 1.0
Fab Shop Prod.: 1.0
North Slope Prod.: 1.0

Labor Rates: ($/hr)
F/S: 45.00
N/S: 52.98

STRUCTURAL WORKS ESTIMATE WORKSHEET
2X-XXX

Code	Size	Description	MTO QUANTITY F/S	MTO QUANTITY N/S	UOM	MATERIAL UNIT COST	MANHOURS (MH) UNIT F/S	MANHOURS (MH) UNIT N/S	MANHOURS (MH) TOTAL F/S	MANHOURS (MH) TOTAL N/S	COST ($) MATERIAL F/S	COST ($) MATERIAL N/S	COST ($) LABOR F/S	COST ($) LABOR N/S	COST ($) TOTAL F/S	COST ($) TOTAL N/S
		PORTABLE LAUNCHER CRADLE for 8" TO 12" assemblies	2		EA	86,900					173800				173800	
		PORTABLE LAUNCHER CRADLE for 14" TO 18" assemblies	2		EA	76,630					153260				153260	
		PORTABLE LAUNCHER CRADLE for 20" TO 24" assemblies	2		EA	128,550					257100				257100	
		PORTABLE LAUNCHER CRADLE for 30" TO 34" assemblies	2		EA	122,810					245620				245620	
		PORTABLE RECEIVER CRADLE for 8" TO 12" assemblies	2		EA	105,580					211160				211160	
		PORTABLE RECEIVER CRADLE for 14" TO 18" assemblies	2		EA	94,520					189040				189040	
		PORTABLE RECEIVER CRADLE for 20" TO 24" assemblies	2		EA	154,320					308640				308640	
		PORTABLE RECEIVER CRADLE for 30" TO 34" assemblies	2		EA	151,340					302680				302680	
		SCAFFOLDING 2 10 0.5			Sections			10.00								
		MISC. BRACKETS			lot	1.00%	5.0%	15.0%								
		N-B-S & Clips			lot	0.75%	5.0%	5.0%								
		BLAST & PRIME ALLOW n/a														
SUB -TOTAL											1,841,300				1,841,300	
		Design Development														
		Procurement Bump														
		Market Trend														
		Productivity Allowance														
		Allowance for unlisted items														
TOTAL		STRUCTURAL WORKS 2X-XXX									1,841,300				1,841,300	

G:\VA\BPProj\TIC_Est\4.0 GPB_Est\3903 GPB Pig Launcher & Receiver Facilities\ROM TIC Option 3.XLS\2 STRUC

14/Mar/03

PROJECT: 125698
WP: 3903

BPXA-CEC00010785

TEMPORARY COMPONENT FACILITIES

PROJECT: GPB PIG L&R FACILITIES
CLIENT: BP EXPLORATION (ALASKA), INC.
LOCATION: PRUDHOE BAY, ALASKA
OPTION 3

Estimate No.: 3903 OPTION 3
Estimator: J.DIAMOND
Date: 14-Mar-03
Rev.: IFR a

Market Condition: 1.0
Fab Shop Prod.: 1.0
North Slope Prod.: 1.0

Labor Rates: ($/hr)
F/S: N/A
N/S: 52.58

MAJOR EQUIPMENT ESTIMATE WORKSHEET
4X-XXX

Code	Size	Description	MTO QUANTITY F/S	MTO QUANTITY N/S	UOM	MATERIAL UNIT COST	MANHOURS (MH) UNIT F/S	MANHOURS (MH) UNIT N/S	MANHOURS (MH) TOTAL F/S	MANHOURS (MH) TOTAL N/S	COST ($) MATERIAL F/S	COST ($) MATERIAL N/S	COST ($) LABOR F/S	COST ($) LABOR N/S	COST ($) TOTAL F/S	COST ($) TOTAL N/S
		PORTABLE LAUNCHER BARREL for 24" 600#		1	EA	24,900						24900				24900
		PORTABLE LAUNCHER BARREL for 30" 600#		1	EA	33,610						33610				33610
		PORTABLE LAUNCHER BARREL for 34" 600#		1	EA	46,590						46590				46590
		PORTABLE LAUNCHER BARREL for 14" 900#		1	EA	15,020						15020				15020
		PORTABLE LAUNCHER BARREL for 16" 900#		1	EA	19,530						19530				19530
		PORTABLE LAUNCHER BARREL for 18" 900#		1	EA	23,080						23080				23080
		PORTABLE LAUNCHER BARREL for 20" 900#		1	EA	29,500						29500				29500
		PORTABLE LAUNCHER BARREL for 24" 900#		1	EA	38,200						38200				38200
		PORTABLE LAUNCHER BARREL for 12" 1500#		1	EA	18,830						18830				18830
		PORTABLE LAUNCHER BARREL for 16" 1500#		1	EA	26,340						26340				26340
		PORTABLE LAUNCHER BARREL for 24" 1500#		1	EA	51,530						51530				51530
		PORTABLE LAUNCHER BARREL for 8" 2500#		1	EA	20,230						20230				20230
		PORTABLE LAUNCHER BARREL for 12" 2500#		1	EA	28,240						28240				28240
		PORTABLE LAUNCHER BARREL for 24" 2500#		1	EA	77,310						77310				77310
		PORTABLE RECEIVER BARREL for 24" 600#		1	EA	30,760						30760				30760
		PORTABLE RECEIVER BARREL for 30" 600#		1	EA	45,700						45700				45700
		PORTABLE RECEIVER BARREL for 34" 600#		1	EA	67,310						67310				67310
		PORTABLE RECEIVER BARREL for 14" 900#		1	EA	20,850						20850				20850
		PORTABLE RECEIVER BARREL for 16" 900#		1	EA	26,960						26960				26960
		PORTABLE RECEIVER BARREL for 18" 900#		1	EA	30,530						30530				30530
		PORTABLE RECEIVER BARREL for 20" 900#		1	EA	35,880						35880				35880
		PORTABLE RECEIVER BARREL for 24" 900#		1	EA	50,660						50660				50660
		PORTABLE RECEIVER BARREL for 12" 1500#		1	EA	25,960						25960				25960
		PORTABLE RECEIVER BARREL for 16" 1500#		1	EA	36,480						36480				36480
		PORTABLE RECEIVER BARREL for 24" 1500#		1	EA	68,320						68320				68320
		PORTABLE RECEIVER BARREL for 8" 2500#		1	EA	27,760						27760				27760
		PORTABLE RECEIVER BARREL for 12" 2500#		1	EA	38,880						38880				38880
		PORTABLE RECEIVER BARREL for 24" 2500#		1	EA	102,510						102510				102510
SUB -TOTAL											1,061,490				1,061,490	
		Design Development														
		Procurement Bump														
		Market Trend														
		Productivity Allowance														
		Allowance for unlisted items														
TOTAL MAJOR EQUIPMENT		4X-XXX									1,061,490				1,061,490	

G:\VAB\PPrj\TIC_Est\4.0 GPB_Est\3903 GPB Pig Launcher & Receiver Facilities\[ROM TIC Option 3.XLS]4 EQUIP

14/Mar/03

PROJECT: 125698
WP: 3903

BPXA-CEC00010786

TEMPORARY COMPONENT FACILITIES

PROJECT: GPB PIG L&R FACILITIES
CLIENT: BP EXPLORATION (ALASKA), INC.
LOCATION: PRUDHOE BAY, ALASKA
OPTION 3

Estimate No.: 3903 OPTION 3
Estimator: J.DIAMOND
Date: 14-Mar-03
Rev.: IFR a

Market Condition: 1.0
Fab Shop Prod.: 1.0
North Slope Prod.: 1.0

Labor Rates: ($/hr)
F/S: 65.00
N/S: 52.98

PIPING WORKS ESTIMATE WORKSHEET
SX-XXX

Code	Size	Description	MTO QUANTITY F/Shop	MTO QUANTITY N/Slope	UOM	MATERIAL UNIT COST	MANHOURS (MH) UNIT F/S	MANHOURS (MH) UNIT N/S	MANHOURS (MH) TOTAL F/S	MANHOURS (MH) TOTAL N/S	COST ($) MATERIAL F/S	COST ($) MATERIAL N/S	COST ($) LABOR F/S	COST ($) LABOR N/S	COST ($) TOTAL F/S	COST ($) TOTAL N/S
		PIPING MODIFICATIONS														
600#																
	24"		36		EA	217,850	360	1440	12960	51840	7842600		712,800	2746464	8555400	2746464
	30"		4		EA	410,300	660	2640	2640	10560	1641200		145,200	559469	1786400	559469
	34"		2		EA	492,500	800	3200	1600	6400	985000		88,000	339072	1073000	339072
900#																
	14"		2		EA	166,200	270	1080	540	2160	332400		29,700	114437	362100	114437
	16"		16		EA	177,900	290	1160	4640	18560	2846400		255,200	983309	3101600	983309
	18"		8		EA	216,800	360	1440	2880	11520	1734400		158,400	610330	1892800	610330
	20"		2		EA	269,000	440	1760	880	3520	538000		48,400	186490	586400	186490
	24"		10		EA	383,100	620	2480	6200	24800	3831000		341,000	1313904	4172000	1313904
1500#																
	12"		44		EA	131,600	220	880	9680	38720	5790400		532,400	2051386	6322800	2051386
	16"		6		EA	213,100	350	1400	2100	8400	1278600		115,500	445032	1394100	445032
	24"		2		EA	441,300	720	2880	1440	5760	882600		79,200	305165	961800	305165
2500#																
	8"		6		EA	102,020	170	680	1020	4080	612120		56,100	216159	668220	216159
	12"		2		EA	201,800	340	1360	680	2720	403600		37,400	144106	441000	144106
	24"		2		EA	667,100	1080	4320	2160	8640	1334200		118,800	457748	1453000	457748
		PIPING ADAPTERS														
600#																
	24"		8		EA	65,355	11		88.0		522840		15,840		538680	
	30"		8		EA	123,090	19		152.0		984720		29,040		1013760	
	34"		8		EA	147,750	22		176.0		1182000		35,200		1217200	
900#																
	14"		8		EA	49,860	27		216.0		398880		11,880		410760	
	16"		8		EA	53,370	29		232.0		426960		12,760		439720	
	18"		8		EA	65,040	36		288.0		520320		15,840		536160	
	20"		8		EA	80,700	44		352.0		645600		19,360		664960	
	24"		8		EA	114,930	62		496.0		919440		27,280		946720	
1500#			8													
	12"		8		EA	39,480	22		176.0		315840		9,680		325520	
	16"		8		EA	63,930	35		280.0		511440		15,400		526840	
	24"		8		EA	132,390	72		576.0		1059120		31,680		1090800	
2500#			8													
	8"		8		EA	30,606	17		136.0		244848		7,480		252328	
	12"		8		EA	60,540	34		272.0		484320		14,960		499280	
	24"		8		EA	200,130	108		864.0		1601040		47,520		1648560	

PROJECT: 125698
WP: 3903

BPXA-CEC00010787

TEMPORARY COMPONENT FACILITIES

PROJECT: GPB PIG L&R FACILITIES
CLIENT: BP EXPLORATION (ALASKA), INC.
LOCATION: PRUDHOE BAY, ALASKA
OPTION 3

Estimate No.: 3903 OPTION 3
Estimator: J.DIAMOND
Date: 14-Mar-03
Rev.: IFR a

Market Condition: 1.0
Fab Shop Prod.: 1.0
North Slope Prod.: 1.0

Labor Rates: ($/hr)
F/S: 65.00
N/S: 52.98

PIPING WORK& ESTIMATE WORKSHEET 5X-XXX Code	Size	Description	MTO QUANTITY F/Shop	MTO QUANTITY N/Slope	UOM	MATERIAL UNIT COST	MANHOURS (MH) UNIT F/S	MANHOURS (MH) UNIT N/S	MANHOURS (MH) TOTAL F/S	MANHOURS (MH) TOTAL N/S	COST ($) MATERIAL F/S	COST ($) MATERIAL N/S	COST ($) LABOR F/S	COST ($) LABOR N/S	COST ($) TOTAL F/S	COST ($) TOTAL N/S
		SCAFFOLDING 2 10 0.5			Sections			10.00								
		SLIDE, SADDLE & SHOE ALLOW				3.00		17.0%								
		BLAST & PRIME ALLOW		n/a		0.3%	8.00	8.00								
		TESTING & INSPECTION ALLOW		1			20.00	20.00	3534.0					2094618		2094618
SUB -TOTAL									54764.0	237216.0	39,869,888		3,012,020	12,567,709	42,881,908	12,567,709
		Design Development														
		Procurement Bump														
		Market Trend														
		Productivity Allowance														
		Allowance for unlisted items														
TOTAL		5x-xxx							54764.0	237216.0	39,869,888		3,012,020	12,567,709	42,881,908	12,567,709

G:\WAB\BPPrj\TIC_Est\4.0 GPB_Est\3903 GPB Pig Launcher & Receiver Facilities\[TIC Option 3.XLS]5 PIPE (1)

14-Mar-03

PROJECT: 125698
WP: 3903

BPXA-CEC00010788

TEMPORARY COMPONENT FACILITIES

PROJECT: GPB PIG L&R FACILITIES
CLIENT: BP EXPLORATION (ALASKA), INC.
LOCATION: PRUDHOE BAY, ALASKA
OPTION 3

Estimate No.: 3903 OPTION 3
Estimator: J.DIAMOND
Date: 14-Mar-03
Rev.: IFR a

Market Condition: 1.0
Fab Shop Prod.: 1.0
North Slope Prod.: 1.0

Labor Rates: ($/hr)
F/S:
N/S:

EQUIPMENT ESTIMATE WORKSHEET
9X-XXX

Code	Size	Description	MTO QUANTITY F/S	MTO QUANTITY N/S	UOM	MATERIAL UNIT COST	MANHOURS (MH) UNIT F/S	MANHOURS (MH) UNIT N/S	MANHOURS (MH) TOTAL F/S	MANHOURS (MH) TOTAL N/S	COST ($) MATERIAL F/S	COST ($) MATERIAL N/S	COST ($) LABOR F/S	COST ($) LABOR N/S	COST ($) TOTAL F/S	COST ($) TOTAL N/S
		"ROLLING STOCK"														
		Vacuum Truck		1	EA	360,000					360000					360000
		Flatbed Truck		1	EA	44,000					44000					44000
		Hydro Crane		1	EA	410,000					410000					410000
		Boom Truck		2	EA	173,000					346000					346000
		Low-Boy Trailer		2	EA	80,000					160000					160000
		Tractor		2	EA	135,000					270000					270000
		SUPPORT EQUIPMENT														
		Air Compressor		2	EA	112,000					224000					224000
		Light Plant		4	EA	20,000					80000					80000
		Gen Set		1	EA	26,000					26000					26000
		Space Heaters		1	EA	37,500					37500					37500
		Shelter / Field Office		1	EA	29,000					29000					29000
		Transfer Pump		1	EA	20,000					20000					20000
		"Tiger" Tanks		2	EA	102,000					204000					204000
		TOOLS & SUPPLIES														
		Initial set-up per crew		2	LOT	90,000					180000					180000
SUB -TOTAL -											2390500					2390500
TOTAL TOOLS & EQUIPMENT		9x-xxx									2390500					2390500

G:\VAB\BPProj\TIC_Est\4.0 GPB_Est\3903 GPB Pig Launcher & Receiver Facilities\[ROM TIC Option 3.XLS]9 TOOLS & EQUIP

14/Mar/03

PROJECT: 125698
WP: 3903

BPXA-CEC00010789

Alaska, Inc.

MEMORANDUM

To:	Subject:	
Telephone Conversation Memo To File	Telcon: BJ Inspection Services Dave Latto, (403) 531-7625 3/7/03, 08:40 AM	
From: Rod Wedge, VAB 6	Date: 3/7/03	Reference: 125698-3903 GPB Pig L/R

BJ's inspection tool is an MFL tool that is somewhat shorter than some of their competitors' tools. He suggests adding about 25% to their recommended launcher/receiver barrel lengths to account for typical UT tool lengths. He provided the following recommended barrel lengths for their MFL tools. Figures in () are approximately +25%. The reference length he provided is <u>from the barrel reducer weld to the barrel cover</u>.

8" dia. pipeline:	10'-6"	(+25% ~ 12'-6")
12	11'-0"	(13-9)
14	11'-6"	(14-6)
16	9'-6"	(12-11)
18	10'-0"	(12-6)
20	10'-6"	(13-2)
24	12'-8"	(15-10)
26	"	(")
28	"	(")
30	13'-6"	(16-11)
34	16'-0"	(20-0)

Dave confirms that BJ does have a 34" MFL tool.

Dave suggests allowing about twice the tool length behind the barrel for room to move the tool and insert it.

They can drive an MFL tool with the line fluid as long as it is single phase (all gas or all liquid). They don't like to drive with multiphase fluid, but it can be done in some cases using a batch pig in front and behind the ILI tool with liquid fill between the batch pigs. It's important to the accuracy of the data to maintain a more or less constant tool speed down the line. He specifically stated that they do *NOT* like to use air as the driver in oil lines because of the fire/explosion hazard due to the possible presence of residue and the greases used. On gas lines they insist on having a 400 psig back-pressure to limit surges when the tool encounters in-line resistance.

They use GPS coordinates on all control points and can get about 1:2000 precision based on the distance between control points. They also like to pinpoint bends, tees, etc., with GPS reference points.

BJ also offers a cleaning and gauging service to operators as well as running dummy tools, etc., before an ILI tool run.

They have their own set to movable trays and trolleys for handling the MFL pig. That equipment is quite specialized for use with their tools. They prefer to use intrusive-type pig signals for reliability reasons.

Alaska, Inc.

MEMORANDUM

To:	Subject:	
Telephone Conversation Memo To File	Telcon: Mike McAdams, Dist. Ops. Mgr., VECO Alaska Inc., 659-3311 3/7/03, 08:15 AM	
From: Rod Wedge, VAB 6	Date: 3/7/03	Reference: 125698-3903 GPB Pig L/R

Mike provided me with the following approximate equipment purchase prices from recent records. VECO typically provides this type of equipment on a 3-year lease-to-buy arrangement for North Slope Operations. The following are generally FOB Prudhoe Bay.

Equipment Description:	Approx. 2002/2003 Purchase Price:
Vacuum Tanker, 325 BBL capacity, highway trailer mounted (requires tractor)	$360,000
Loader, Case 966, 3.5 CY bucket capacity	$220,000
5 Ton Flatbed Truck, Ford F550, 4WD	$44,000
Air Compressor, 1300 CFM	$112,000
Light Plant	$20,000
Portable Electric Generator Set, 63KW	$26,000
Indirect Fired Heater (Fairbanks, AK Mfgr.)	$37,500
" Cherry Picker," wheeled crane, hydraulic, 60T capacity	$410,000
Boom Truck, 17T capacity	$173,000
Break Shack/Field Office Trailer	$29,000
Diesel transfer pump, Mission 4" x 3"	$20,500
Tanks, open-top, rectangular, 400 BBL	$102,000
Small tool allowance (assumption - backed out from typical per man-hour allowance assuming 3-year amortization and a full-time crew of 11 working 7 d/wk x 12 hrs./day x 48 wks./yr., 6% P.A., monthly)	$90,000 (back-calculated from a typical man-hour allocation)
Long-bed Flat Highway Trailer (tractor-pull)	$40,000
" Low-boy" trailer for oil field duty w/ hydraulic neck, 70T capacity	$80,000
Tractor (for long-bed trailer pull)	$135,000

Wedge, Rodney F.

From: Dusek, Larry [dusekl@ccvalve.com]
Sent: Friday, March 07, 2003 1:24 PM
To: Wedge, Rodney F.
Subject: RE: Through-Conduit Valves for Pig Launcher/Receiver Facilities

Importance: High

Rod,

Listed below are budgetary prices for the valve sizes and ANSI class per your spread sheet attachment. Valves quoted are 259 trim (NACE), which is
body and end connections (ASTM 350 LF-2 (M), carbon steel ball (ASTM A694
F50 Mod) with 3 mils of Electroless Nickel, Seat Ring (410 stainless steel)
with a nylon seat insert and the Lip Seal groove inlayed with 316 stainless
steel.

8" ANSI 2500 FxF RTJ - Worm Gear Operated $16,829.00 each

12" ANSI 1500 FxF RTJ - Worm Gear Operated $23,992.00 each

14" ANSI 900 FxF RTJ - Worm Gear Operated $31,650.00 each

16"ANSI 900 FxF RTJ - Worm Gear Operated $33,861.00 each

16" ANSI 1500 FxF RTJ - Worm Gear Operated $40,162.00 each

8" ANSI 900 FxF RTJ - Worm Gear Operated $41,366.00 each

20" ANSI 900 FxF RTJ - Worm Gear Operated $51,575.00 each

24" ANSI 600 FxF RF - Worm Gear Operated $42,267.00 each
24" ANSI 900 FxF RTJ - Worm Gear Operated $73,971.00 each
24" ANSI 1500 FxF RTJ - Worm Gear Operated $84,290.00 each
24" ANSI 2500 FxF RTJ - Worm Gear Operated $127,500 each

34" ANSI 600 FxF RF - Worm Gear Operated $95,423.00 each

Note: ANSI 2500 prices were not available. They are strictly a guess.

If you have any questions please give me a call.

Thanks

Larry Dusek
Account Manager
Cooper Cameron Valves
Phone 303-841-1693
e-mail dusekl@ccvalve.com

-----Original Message-----
From: Wedge, Rodney F. [mailto:Rod.Wedge@veco.com]
Sent: Thursday, March 06, 2003 3:49 PM
To: Dusek Larry (CC Valve) (E-mail)
c: Diamond, Jim E.
Subject: Through-Conduit Valves for Pig Launcher/Receiver Facilities

BPXA_CEC00010703

<< File: CCValve_Ref.xls >> Larry:

Thanks for talking with me about the ROM budget work I am doing for BP at
Prudhoe Bay regarding pig launcher and receiver facilities. As I said, this
is in the earliest stages of the project budget process, so I am looking for
approximations/rough budget numbers and any suggestions you may have regarding through-conduit valve options for use with pig launchers/receivers. It's too early in the project development to consider
specific trims and other options, but I'd prefer to assume trim for sour service and manual worm-gear operator. If you don't have approximate data
readily at hand for a specific size/class, your best guess is more than adequate for our need right now.

I am attaching an MS Excel sheet with several tables. The bottom three tables are my first cut tally of the sizes and pressure class valves I anticipate under three different options we are considering. There are 71
lines on the list, and each may need a pig launcher and receiver (142 potential assemblies). Permanently installed facilities would be represented by my "Option 1." BP standards call for double valves on connection to production lines so you will note that I've assumed 4 valves
per line under the case in which we'd install fixed facilities.

We are also looking at the possibility of making up portable launcher and
receiver skids (Options 2 & 3) that would serve several pressure class lines
by use of adapter pups at the isolation valves. The bottom two tables on
the sheet indicate the number of size/class valves for main line connections
for those options. In these cases, we're thinking that we'd leave one valve
on each end of each line to facilitate hook-up of portable launcher/receiver
equipment.

Please let me know if you have any problem with the file attachment.

We appreciate your input at this early stage.

Thanks

Rod

R. F. (Rod) Wedge, P.E.
Sr. Project Engineer
VECO Alaska, Inc.
Tel.: 907-762-1766, FAX 762-1631

<<CCValve_Ref.xls>>

~~~~~~

This e-mail is confidential, may contain proprietary information of the Cooper Cameron Corporation and its operating Divisions and may be confidential or privileged.

This e-mail should be read, copied, disseminated and/or used only by the addressee. If you have received this message in error please
~~~~~~

delete it, together with any attachments, from your system.
~~~~~~
~~~~~~

VECO ENGINEERING

TELEPHONE & CONVERSATION REPORT

CLIENT FILE # _____

PROJECT GPB PIG L/R FACILITIES PROJECT NO. 125698-3903

SUBJECT THROUGH-CONDUIT BALL VALVES

BY ROD WEDGE DATE 3/6/03 PAGE 1 OF 3

INDIVIDUAL(S) PRESENT: Rod Wedge, VECO; Larry Dusek, Cooper-Cameron Valve

LOCATION

DIRECT CONVERSATION ☐
PHONE CONVERSATION ✓
PHONE (303 841-1693
INCOMING ____ AM ____
OUTGOING 3/6/03 PM 1:30 PM
FORMAL LETTER TO FOLLOW ☐ YES ☒ NO

CONVERSATION NOTES:

	COST/ SCHEDULE IMPACT	ACTION BY	ACTION DATE
Larry will provide RTM cost data — I will forward by e-mail a list of the size/class through-conduit valves anticipated			
Send e-mail to: "DuskL@ccvalve.com"	N/A	RPW	3/6/03
AK Pipe & Supply is local agent.			

COPIES ~~TRM/File~~ Report Apdx.

Wedge, Rodney F.

From: Wedge, Rodney F.
Sent: Thursday, March 06, 2003 1:49 PM
To: Dusek Larry (CC Valve) (E-mail)
Cc: Diamond, Jim E.
Subject: Through-Conduit Valves for Pig Launcher/Receiver Facilities

Larry:

Thanks for talking with me about the ROM budget work I am doing for BP at Prudhoe Bay regarding pig launcher and receiver facilities. As I said, this is in the earliest stages of the project budget process, so I am looking for approximations/rough budget numbers and any suggestions you may have regarding through-conduit valve options for use with pig launchers/receivers. It's too early in the project development to consider specific trims and other options, but I'd prefer to assume trim for sour service and manual worm-gear operator. If you don't have approximate data readily at hand for a specific size/class, your best guess is more than adequate for our need right now.

I am attaching an MS Excel sheet with several tables. The bottom three tables are my first cut tally of the sizes and pressure class valves I anticipate under three different options we are considering. There are 71 lines on the list, and each may need a pig launcher and receiver (142 potential assemblies). Permanently installed facilities would be represented by my "Option 1." BP standards call for double valves on connection to production lines so you will note that I've assumed 4 valves per line under the case in which we'd install fixed facilities.

We are also looking at the possibility of making up portable launcher and receiver skids (Options 2 & 3) that would serve several pressure class lines by use of adapter pups at the isolation valves. The bottom two tables on the sheet indicate the number of size/class valves for main line connections for those options. In these cases, we're thinking that we'd leave one valve on each end of each line to facilitate hook-up of portable launcher/receiver equipment.

Please let me know if you have any problem with the file attachment.

We appreciate your input at this early stage.

Thanks

`od

R. F. (Rod) Wedge, P.E.
Sr. Project Engineer
VECO Alaska, Inc.
Tel.: 907-762-1766, FAX 762-1631

CCValve_Ref.xls

Approximate Distribution by Nominal Pipe Size and Line Class - Option 1

NP Size:	8	12	14	16	18	20	24	30	34
Class:									
600							18	2	1
900			1	8	4	1	5		
1500		22		3			1		
2500	3	1					1		

Launcher & Receiver Unit Pairs Assumed Necessary - Options 2 & 3

by Size and Rating

NP Size:	8	12	14	16	18	20	24	30	34
Class:									
600							(Use 2500)	1	1
900			1	(Use 1500)	1	1	(Use 2500)		
1500		(Use 2500)		1			(Use 2500)		
2500	1	1					1		

Notes:
1) It is assumed that flanged adapter pups could be utilized on the skid-to-isolation-valve connections.
2) Isolation valve sets would be required for the line class rating in each use.
3) Total pig barrel units assumed = 18 (9 launcher units & 9 receiver units).

Approximate Count - Mainline Thru-conduit Valves - Option 1

by Size and Rating (2 each site x 2 sites/line)

NP Size:	8	12	14	16	18	20	24	30	34
Class:									
600							72	8	4
900			4	32	16	4	20		
1500		88		12			4		
2500	12	4					4		

Approximate Count - Fixed, Mainline Thru-conduit Valves - Option 2/3

by Size and Rating (1 each site x 2 sites/line)

NP Size:	8	12	14	16	18	20	24	30	34
Class:									
600							36	4	2
900			2	16	8	2	10		
1500		44		6			2		
2500	6	2					2		

Approx. Count - Movable, Mainline Thru-conduit Valves - Option 2/3

by Size and Rating (1 each launcher/receiver skid or set-up)

NP Size:	8	12	14	16	18	20	24	30	34
Class:									
600							2	2	2
900			2	2	2	2	2		
1500		2		2			2		
2500	2	2					2		

Wedge, Rodney F.

From: Simpson, Jeff [Jeff.Simpson@tdwilliamson.com]
Sent: Friday, March 07, 2003 2:00 PM
To: Wedge, Rodney F.
Subject: RE: Pig Launcher/Receiver Equipment

Rodney;

We offer the following very rough Budget Only Pricing:
Note: All items are Skid Mounted complete w/Valves, Piping, Jib-Crane & Tray.

1.	24"x 30"-600 lb.	L	215,115.00	L=31'	W=9'-6"	approx weight: 35,525 lbs.
2.	"	R	225,295.00	L=36'	W=9'-6"	approx weight: 37,700 lbs.
3.	30"x 36"-600 lb.	L	411,645.00	L=39'	W=11'-4"	approx weight: 52,500 lbs.
4.	"	R	431,315.00	L=46'	w=11'-4"	approx weight; 56,340 lbs.
5.	34"x 40"-600 lb.	L	491,825.00	L=46'	W=12'-4"	approx weight: 76,300 lbs.
6	"	R	511,840.00	L=56'	W=12'-4"	approx weight: 82,500 lbs.
7.	14"x 18"-900 lb.	L	106,575.00			
8.	"	R	111,240.00			
9.	16"x 20"-900 lb.	L	129,995.00			
10	"	R	136,112.00			
11.	18"x 22"-900 lb.	L	170,635.00			
12.	"	R	187,305.00			
13.	20"x 24"-900 lb.	L	200,385.00			
14.	"	R	209,900.00			
15.	24"x 30"-900 lb.	L	316,525.00			
16.	"	R	328,255.00			

ANSI 1500 lb. Systems is approx. 35% higher than ANSI 1500 lb. Systems.
Not enough time to get Valve cost.

Exception to ANSI 2500 lb. We can not comply with this classification.

Representative TDW Bulletin 5000.002.00 attached.
Note: All dimensions and weights is approx.

Regards
Jeff Simpson

-----Original Message-----
From: Wedge, Rodney F. [mailto:Rod.Wedge@veco.com]
Sent: Friday, March 07, 2003 3:41 PM
To: Simpson, Jeff
Subject: RE: Pig Launcher/Receiver Equipment

Jeff:

BPXA-CEC00010799

"Quotes" are not necessary - just ROM figures for a budget with +/-50% precision.

If you have done some skids with barrel, kicker line, and other equipment,
approximate cost/weight (so we can estimate shipping) would be good
xamples. For future reference is developing project scope, it would be very helpful to know what most operators ask for with respect to a portable
skid.

Mainly, we need barrel assemblies with all nozzles and closure. Our estimator is making some allowances for skid assemblies based on historical
data he has. I am also getting some budget info on valves.

Any examples you can easily provide would be very helpful - especially for
the non-standard sizes/classes.

Rod

-----Original Message-----
From: Simpson, Jeff [mailto:Jeff.Simpson@tdwilliamson.com]
Sent: Friday, March 07, 2003 11:46 AM
To: Wedge, Rodney F.
Subject: RE: Pig Launcher/Receiver Equipment

Rod;
Need your help, please advised if skids are required, if so what equipment
is located on the skid or do you want us to quote barrels only just need
ome direction.
egards
Jeff Simpson

-----Original Message-----
From: Wedge, Rodney F. [mailto:Rod.Wedge@veco.com]
Sent: Thursday, March 06, 2003 2:21 PM
To: Simpson, Jeff
Cc: Diamond, Jim E.
Subject: Pig Launcher/Receiver Equipment

Jeff:

Thanks for talking with me about the ROM budget work I am doing for BP at
Prudhoe Bay regarding pig launcher and receiver facilities. As I said, this
is in the earliest stages of the project budget process, so I am looking for
approximations/rough budget numbers and any suggestions you may have regarding equipment options.

I am attaching an MS Excel sheet with several tables. The top table is my
first cut tally of the line sizes and pressure classes we are asked to consider. There are 71 lines on the list, and each may need a pig launcher
and receiver (142 potential assemblies). Permanently installed facilities
ould be represented by my "Option 1."

We are also looking at the possibility of making up portable launcher

and
receiver skids (Options 2 & 3) that would serve several pressure class lines
by use of adapter pups at the isolation valves. The second table from the
top of the sheet indicates the number of size/class PAIRS (launcher & receiver) that I've assumed. If you think it would be smarter to use a standard Class 1500 assembly in the case of the 12-inch and the 24-inch, feel free to comment.

Please let me know if you have any problem with the file attachment.

We appreciate your input at this early stage.

Thanks

Rod

R. F. (Rod) Wedge, P.E.
Sr. Project Engineer
VECO Alaska, Inc.
Tel.: 907-762-1766, FAX 762-1631

<<TDWmson_Ref.xls>>

BPXA_CEC00010801

Launchers and Receivers

For Pipelines 3" through 44"

T. D. Williamson, Inc.

Bulletin No: 5000.001.00
Date: February 1999
Cross Indexing No: n/a
Supersedes: 351.0 (3/1/83)

■ **Launching & Receiving Barrels**

Description

TDW designs and manufactures Pig Launchers and Receivers for pipelines of all sizes and pressure ratings for both gas and liquid service.

Our standard design will accommodate most types, including displacement, batching and cleaning pigs. The TDW standard design is capable of launching one pig and receiving two pigs. Both Launchers and Receivers are equipped with TDW closures. All units are equipped with properly sized and located nozzles to allow the proper pig launching or pig receiving.

Features

TDW incorporates several important features in our standard Launchers and Receivers. Some of these are:

- TDW closures, threaded type on barrel sizes up to 10", and clamp-ring type on larger sizes
- A TDW PIG-SIG® on all Receivers.
- An eccentric reducer on all Launchers to assure proper pig line up.
- Properly sized and located vent, gauge, drain, kicker or bypass nozzles.
- All welds are 100% inspected.
- Mill test certificates furnished.
- Designed to the ASME B31.4 or ASME B31.8 codes.
- All units are sandblasted and primer coated.
- Hydrostatically tested.

Options

T.D. Williamson, Inc., is committed to providing you with the exact product to assist you in planning, budgeting, and meeting your individual application needs.

TDW Systems can provide:

- Increased length to accommodate corrosion inspection pigs
- Weld beveled outlets
- Internal trays
- Special materials
- Other codes such as ASME 31.3, ASME Section VIII, European
- Vertical supports
- Vertical units
- Launcher/Receiver combination
- Purge connections
- Extreme temperatures and chemical applications

In addition to Launchers and Receivers, TDW can provide complete launching and receiving systems which may include skid-mounted support structure, valves, bypass piping, pig handling equipment, and batching, displacement, or cleaning pigs.

Toll Free
1-800-571-7447
1-888-TDWmSon (839-6766)

TDW Pigging Products ■ P.O. Box 1121 ■ Tulsa, Oklahoma 74101-1121 ■ 918-447-5400 ■ Fax: 918-664-7891 ■ www.tdwilliamson.com

BPXA-CEC00010802

Dimensions and Part Numbers

Standard Pig Launchers

T. D. Williamson, Inc.

Typical Pig Launching Barrels — 3" through 6"

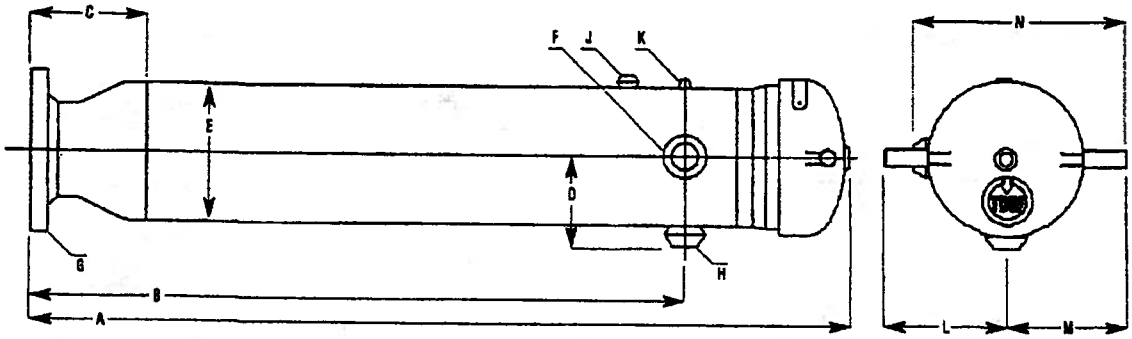

ASME Class 600 Lb.

Nominal Line Size	A	B	C	D	E	F	G	H	J	K	L	M	N	Approx. Weight
3	28-7/8	19-3/4	7-5/8	3-7/8	4-1/2	3/4	3	2	1	1/2	6-9/32	6-9/32	12-9/16	60
4	32-11/16	22	9-7/8	4-7/8	6-5/8	1	4	NPT	NPT	NPT	7-1/2	7-1/2	15	120
6	53	39-1/8	11	5-7/8	8-5/8	2	6	2	1	1/2	8-23/32	8-23/32	17-7/16	270

(Available in ASME 150 Lb. through 1500 Lb.)
All dimensions are approximate and shown in inches.

Typical Pig Launching Barrels — 8" through 10"

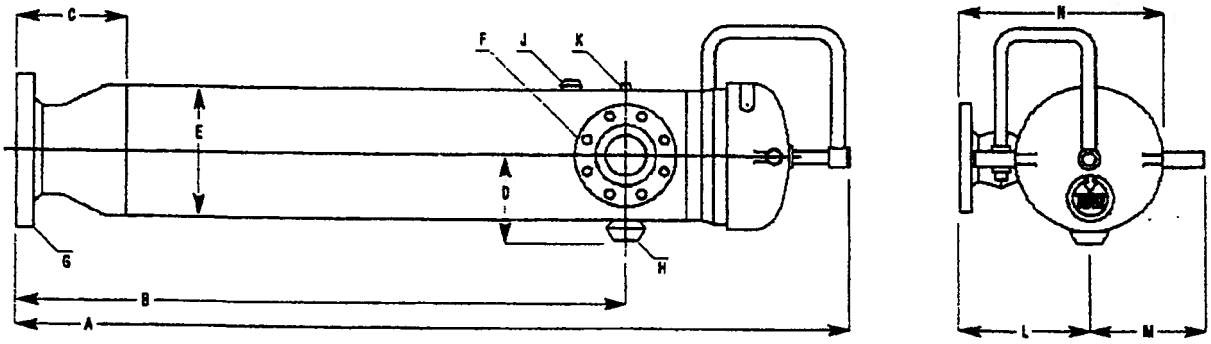

ASME Class 600 Lb.

Nominal Line Size	A	B	C	D	E	F	G	H	J	K	L	M	N	Approx. Weight
8	64	44-1/2	12-5/8	7	10-3/4	2	8	2	1	1/2	10-3/16	10-1/4	17-7/8	415
10	73-5/16	48	14-3/8	11	12-3/4	3	10	NPT	NPT	NPT	11-13/16	11-1/8	19-11/16	615

(Available in ASME 150 Lb. through 1500 Lb.)
All dimensions are approximate and shown in inches.

TDW Pigging Products ■ P.O. Box 1121 ■ Tulsa, Oklahoma 74101-1121 ■ 918-447-5400 ■ Fax: 918-664-7091 ■ www.tdwilliamson.com

Data subject to change without notice. / Dimensions and for construction unless specified. / ® Registered trademark of T. D. Williamson, Inc. in the United States and foreign countries / TM Trademark of T. D. Williamson, Inc. in the United States and foreign countries / © Copyright 1999. All rights reserved T. D. Williamson, Inc. / Printed in USA

Dimensions and Part Numbers

Standard Pig Receivers

T. D. Williamson, Inc.

Typical Pig Receiving System — 32" through 44"

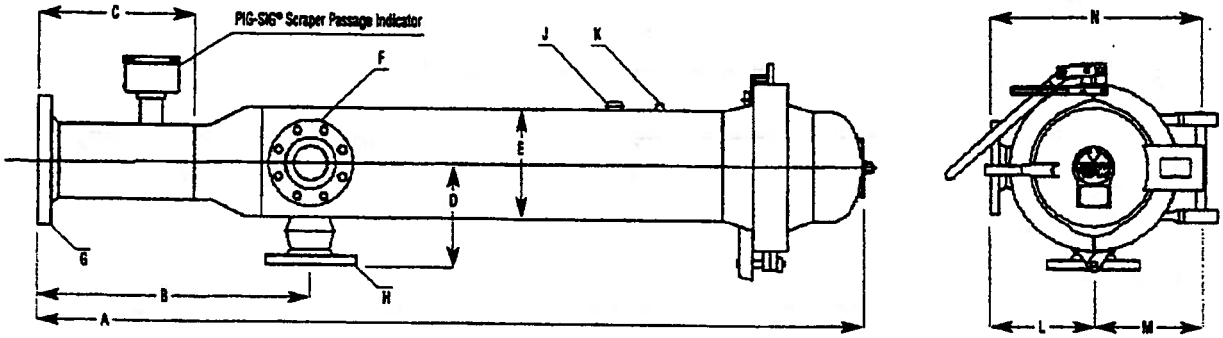

ASME Class 600

Nominal Line Size	A	B	C	D	E	F	G	H	J	K	L	M	N	Approx. Weight
32	229-1/2	91-3/4	56-3/4	24-1/2	36	10	32	2	2	1/2	28-1/8	25-3/8	52-3/8	9,520
34	252-7/8	99-1/8	64-1/8	25-1/2	38	10	34	Flanged	NPT	NPT	30-1/4	29	56	10,845
36	260-3/8	101-3/4	65-1/2	26-1/2	40	12	36	↑	↑	↑	30-11/16	28	58-3/16	12,420
38	270	105-3/8	69	27-1/2	42	12	38				31-11/16	28-5/16	58-3/16	12,820
40	286-3/8	109-3/4	73-1/2	28-1/2	44	12	40				32-11/16	29-5/16	60-5/16	14,110
42	295-1/2	116	74-3/4	29-1/2	46	14	42				35-3/16	33-11/16	64-11/16	16,110
44	324-1/4	125-1/8	84	30-1/2	48	14	44	↓	↓	↓	34-15/16	32-5/8	68	18,150

NOTE: TDW threaded type closures are used on barrel sizes up to 14". TDW clamp ring type closures are used on all barrels 16" and larger.
For sizes and pressure ratings not listed, consult the factory.
(Available in ASME 150 Lb. through 1500 Lb.)
All dimensions are approximate and shown in inches.

TDW Pigging Products ■ P.O. Box 1121 ■ Tulsa, Oklahoma 74101-1121 ■ 918-447-5400 ■ Fax: 918-664-7091 ■ www.tdwilliamson.com

Data subject to change without notice. / Dimensions are for construction unless certified. / ® Registered trademark of T. D. Williamson, Inc. in the United States and foreign countries / ™ Trademark of T. D. Williamson, Inc. in the United States and foreign countries / © Copyright 1998. All rights reserved T. D. Williamson, Inc. / Printed in USA

Dimensions and Part Numbers

Standard Pig Launchers

T. D. Williamson, Inc.

Typical Pig Launching Barrels — 32" through 44"

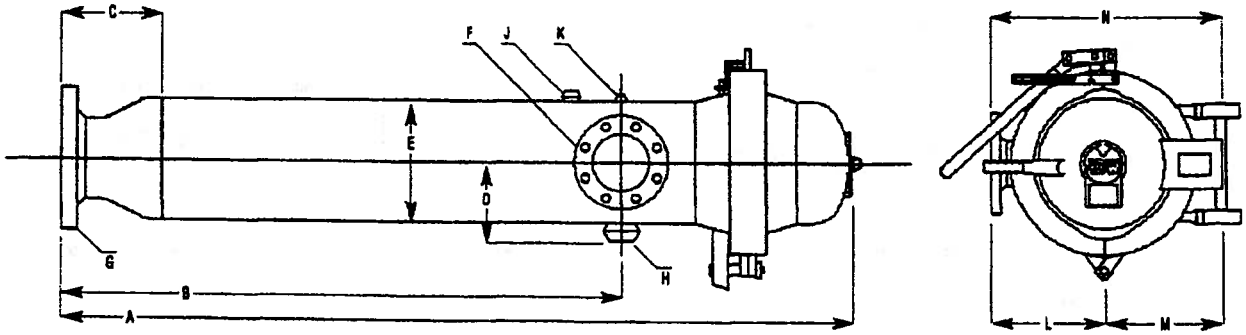

ASME Class 600 Lb.

Nominal Line Size	A	B	C	D	E	F	G	H	J	K	L	M	N	Approx. Weight
32	126-7/8	91-1/2	34-5/8	24-1/2	36	10	32	4	2	1/2	28-1/8	25-3/8	52-3/8	6,325
34	135-7/8	99-1/4	35	25-1/2	38	10	34	Flanged	NPT	NPT	30-1/4	29	56	7,225
36	140-3/4	101-1/8	35-1/2	26-1/2	40	12	36	↑	↑	↑	30-11/16	28	58-3/16	8,422
38	142-1/8	103-1/2	34-3/8	27-1/2	42	12	38				31-11/16	28-5/16	58-3/16	7,980
40	148-3/4	108-3/8	34-3/4	28-1/2	44	12	40				32-11/16	32-1/2	62-1/2	8,770
42	157-1/4	114-1/4	39-3/8	29-1/2	46	14	42				35-3/16	33-11/16	64-11/16	10,000
44	168	123-7/8	39-3/4	30-1/2	48	14	44	↓	↓	↓	34-15/16	32-5/8	68	11,835

NOTE: TDW threaded type closures are used on barrel sizes up to 14". TDW clamp ring type closures are used on all barrels 16" and larger.
For sizes and pressure ratings not listed, consult the factory.
(Available in ASME 150 LB. through 1500 Lb.)
All dimensions are approximate and shown in inches.

TDW Pigging Products ■ P.O. Box 1121 ■ Tulsa, Oklahoma 74101-1121 ■ 918-447-5400 ■ Fax: 918-664-7091 ■ www.tdwilliamson.com

Data subject to change without notice. / Dimensions not for construction unless certified. / ® Registered trademark of T. D. Williamson, Inc. in the United States and foreign countries / ™ Trademark of T. D. Williamson, Inc. in the United States and foreign countries / © Copyright 1999. All rights reserved. T. D. Williamson, Inc. / Printed in USA

Dimensions and Part Numbers

Standard Pig Receivers

T.D. Williamson, Inc.

Typical Pig Receiving Barrels — 3" through 6"

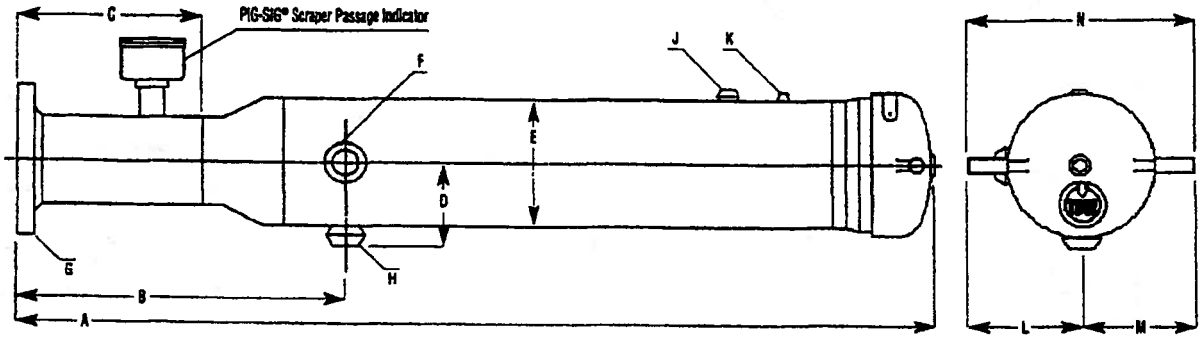

ASME Class 600 Lb.

Nominal Line Size	A	B	C	D	E	F	G	H	J	K	L	M	N	Approx. Weight
3	45-1/2	18-1/4	10-3/4	3-7/8	4-1/2	3/4	3	2	1	1/2	6-9/32	6-9/32	12-9/16	95
4	48-11/16	20-1/16	10-3/4	4-7/8	6-5/8	1	4	NPT	NPT	NPT	7-1/2	7-1/2	15	150
6	111-1/4	45-7/8	28-1/8	5-7/8	8-5/8	2	6	2	1	1	8-23/32	8-23/32	17-7/16	420

(Available in ASME 150 Lb. through 1500 Lb.)
All dimensions are approximate and shown in inches.

Typical Pig Receiving Barrels — 8" through 10"

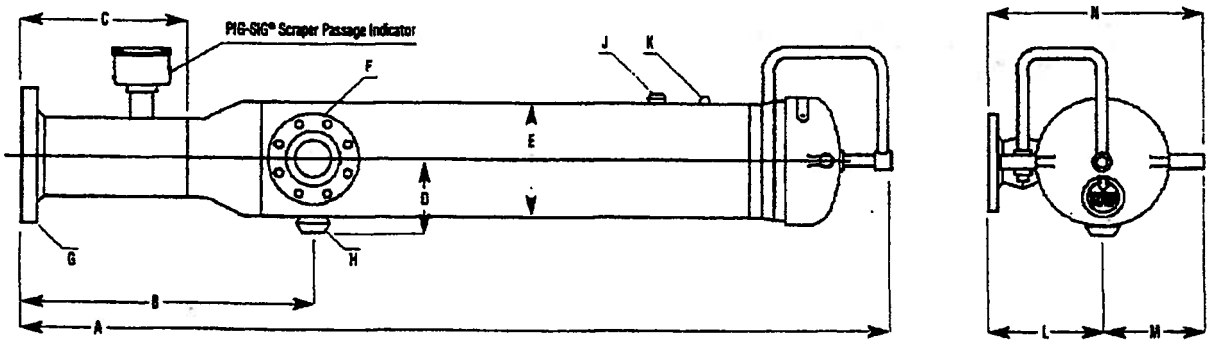

ASME Class 600 Lb.

Nominal Line Size	A	B	C	D	E	F	G	H	J	K	L	M	N	Approx. Weight
8	121-3/4	43-1/8	31-11/16	7	10-3/4	2	8	2	1	1/2	10-3/16	10-1/4	17-7/8	525
10	134-5/16	51	33-7/16	8	12-3/4	3	10	NPT	NPT	NPT	11-13/16	11-18	19-11/16	830

(Available in ASME 150 Lb. through 1500 Lb.)
All dimensions are approximate and shown in inches.

TDW Pigging Products ■ P.O. Box 1121 ■ Tulsa, Oklahoma 74101-1121 ■ 918-447-5400 ■ Fax: 918-664-7091 ■ www.tdwilliamson.com

Data subject to change without notice. / Dimensions and for construction unless certified. / ® Registered trademark of T. D. Williamson, Inc. in the United States and foreign countries / ™ Trademark of T. D. Williamson, Inc. in the United States and foreign countries / © Copyright 1999. All rights reserved. T. D. Williamson, Inc. / Printed in USA

Dimensions and Part Numbers

Standard Pig Launchers

T. D. Williamson, Inc.

Typical Pig Launching Barrels — 12" through 30"

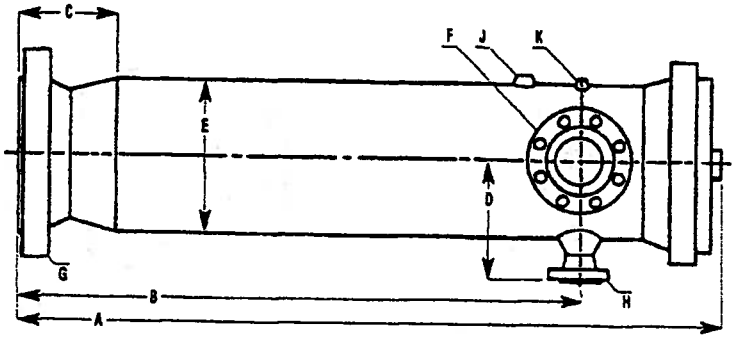

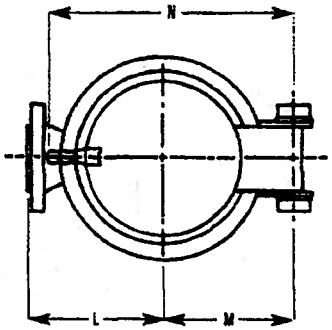

ASME Class 600 Lb.

Nominal Line Size	A	B	C	D	E	F	G	H	J	K	L	M	N	Approx. Weight
12	71-3/4	55-1/8	20-1/2	12-3/4	16	4	12	2	1	1/2	15-1/8	13-3/4	29-1/2	900
14	72-15/16	56	21-7/8	13-7/8	18	4	14	NPT	NPT	NPT	15-3/8	14-7/8	31-5/8	1,315
16	68-3/4	51-1/2	27-3/8	14-3/8	20	4	16				16-3/8	16	36-5/16	1,673
18	74-5/8	55-1/4	27-5/8	15-11/16	22	6	18				19-13/16	17-1/8	35-7/8	1,980
20	76-1/8	56-1/2	27-7/8	16-9/16	24	6	20	4			20-13/16	18-5/16	40-1/2	2,270
22	86-1/16	64-3/4	32-1/8	19-1/2	26	6	22	Flanged			21-1/8	19-15/16	44-11/16	3,075
24	89-1/2	66-1/2	32-3/8	20-1/2	28	8	24		2		23-5/8	21-1/16	46-3/16	3,860
26	100-1/2	70-3/4	33-1/8	21-1/2	30	8	26				24-5/8	22-3/8	46-3/8	4,050
28	104-5/8	73-1/2	33-5/8	22-1/2	32	8	28				26-5/8	22-1/8	49-1/8	4,120
30	110-13/16	78-3/4	34-1/8	23-1/2	34	10	30				27-3/16	24-5/8	50-7/8	5,205

NOTE: TDW threaded type closures are used on barrel sizes up to 14". TDW clamp ring type closures are used on all barrels 16" and larger.
For sizes and pressure ratings not listed, consult the factory.
(Available in ASME 150 LB. through 1500 Lb.)
All dimensions are approximate and shown in inches.

TDW Pigging Products ■ P.O. Box 1121 ■ Tulsa, Oklahoma 74101-1121 ■ 918-447-5400 ■ Fax: 918-664-7091 ■ www.tdwilliamson.com

Data subject to change without notice. / Dimensions not for construction unless specified. / All Registered trademarks of T. D. Williamson, Inc. in the United States and foreign countries / TM Trademark of T. D. Williamson, Inc. in the United States and foreign countries / © Copyright 1999. All rights reserved T. D. Williamson, Inc. / Printed in USA

Dimensions and Part Numbers

Standard Pig Receivers

T.D. Williamson, Inc.

Typical Pig Receiving Barrels — 12" through 30"

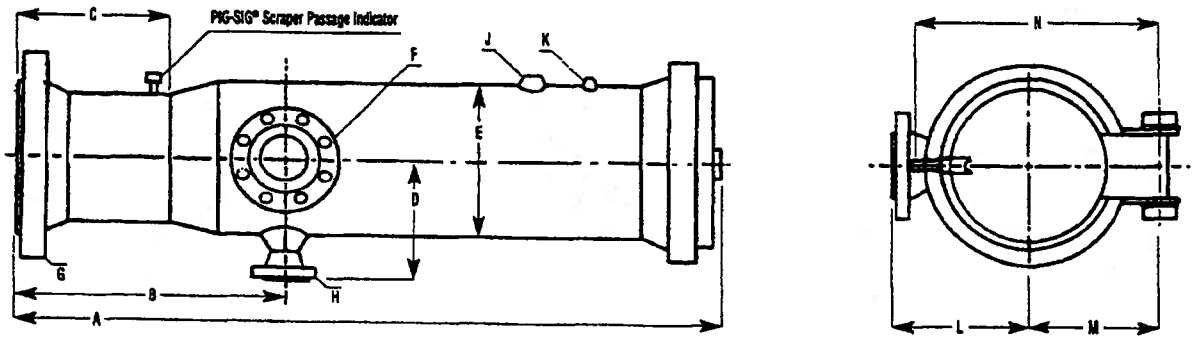

ASME Class 600

Nominal Line Size	A	B	C	D	E	F	G	H	J	K	L	M	N	Approx. Weight
12	134-3/8	55-3/16	34-5/8	12-3/4	16	4	12	2	1	1/2	15-1/8	13-3/4	29-1/2	1,350
14	134-5/16	55-3/4	33-15/16	13-7/8	18	4	14	Threaded	NPT	NPT	15-3/8	14-7/8	31-5/8	1,710
16	109-5/8	50-3/4	24	14-11/16	20	4	16	↑	↑	↑	16-3/8	16	36-5/16	2,075
18	114-1/4	47-7/8	27-3/8	15-9/16	22	6	18	↓			19-13/16	17-1/8	38-5/16	2,185
20	125-3/8	56-3/4	28-5/8	16-9/16	24	6	20	4			20-13/16	18-5/16	40-1/2	2,880
22	143-1/4	64-7/8	32-5/8	19-7/16	26	6	22	Flanged	↓		21-1/8	19-15/16	44-11/16	4,215
24	139-7/8	58-1/4	34	20-1/2	28	8	24	↑	2		23-5/8	21-1/16	46-3/16	4,950
26	168-1/2	69-1/2	38-1/2	21-1/2	30	8	26		↑		24-5/8	22-3/8	46-3/8	5,240
28	172-1/4	68-1/4	39-3/4	22-1/2	32	8	28				26-5/8	22-1/8	49-1/8	5,295
30	190	79-3/8	55-1/4	23-1/2	34	10	30	↓	↓	↓	27-3/16	24-5/8	50-7/8	7,360

NOTE: TDW threaded type closures are used on barrel sizes up to 14". TDW clamp ring type closures are used on all barrels 16" and larger.
For sizes and pressure ratings not listed, consult the factory.
(Available in ASME 150 Lb. through 1500 Lb.)
All dimensions are approximate and shown in inches.

Data subject to change without notice. / Dimensions may be approximate unless marked. / ® Registered trademark of T. D. Williamson, Inc. in the United States and foreign countries / TM Trademark of T. D. Williamson, Inc. in the United States and foreign countries / © Copyright 1999. All rights reserved T. D. Williamson, Inc. / Printed in USA

Complete Pig Systems

Launching and Receiving

T. D. Williamson, Inc.

Bulletin No: 5000.002.00
Date: February 1999
Cross Indexing No: n/a
Supersedes: n/a

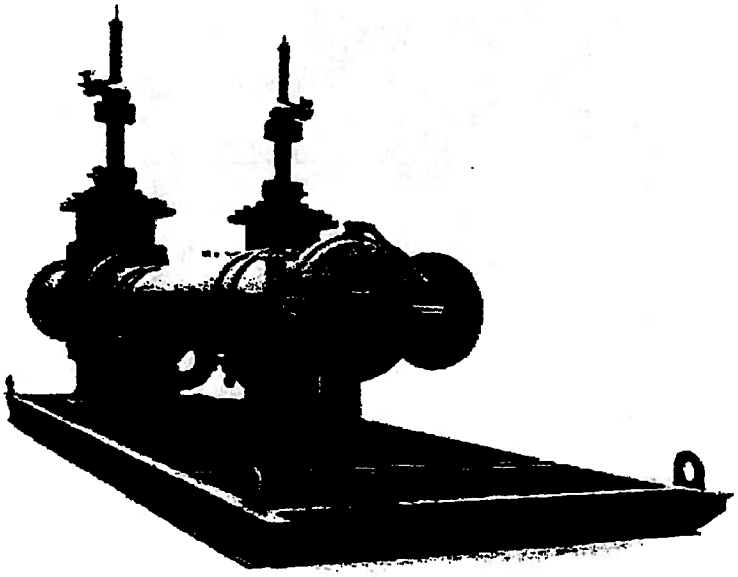

■ Complete Pig System

Description

TDW offers complete Pig Launching and Receiving Systems to meet your total pigging needs. These system packages include the Launcher/Receiver, Closure, PIG-SIG® Indicators, Bypass Piping, Valves, Handling Equipment if required, and Skid Mounted to ease field installation. All system packages are designed to the pipeline codes you require.

Features

Our standard Launching and Receiving Systems are complete packages. All components are assembled, tested, and ready for field installation.

- Units are furnished with TDW Closures.
- Units are furnished with the TDW PIG-SIG®, installed.
- All nozzles are properly sized and located.
- Bypass piping is fabricated and connected for sure fit-up.
- All units are sandblasted and prime coated.
- Handling equipment is offered for handling larger pigs.
- Units designed, tested, and inspected to meet your code requirements.
- 100% weld inspection.

Options

T.D. Williamson, Inc., is committed to providing you with the exact product to assist you in planning, budgeting, and meeting your individual application needs.

TDW can provide:

- Systems designed to handle corrosion inspection pigs.
- Automated packages to simplify operation.
- Special materials.
- ASME B31.4, B31.8, B31.3, ASME Section VIII Codes.
- Special surface preparation and finish.
- Horizontal, vertical, or sloped units.

Patented in the United States and in foreign countries.
ISO 9001 Certified

Toll Free
1-888-TDWmSon (839-6766)

T.D. Williamson, Inc. ■ P.O. Box 3409 ■ Tulsa, Oklahoma 74101-3409 ■ 918-447-5100 ■ Fax: 918-446-6327 ■ www.tdwilliamson.com

Data subject to change without notice. / Dimensions not for construction unless certified. / ® Registered trademark of T. D. Williamson, Inc. in the United States and foreign countries / ™ Trademark of T. D. Williamson, Inc. in the United States and foreign countries / © Copyright 1999. All rights reserved T. D. Williamson, Inc. / Printed in USA

T. D. Williamson, Inc.

Complete Pig Launching and Receiving Systems

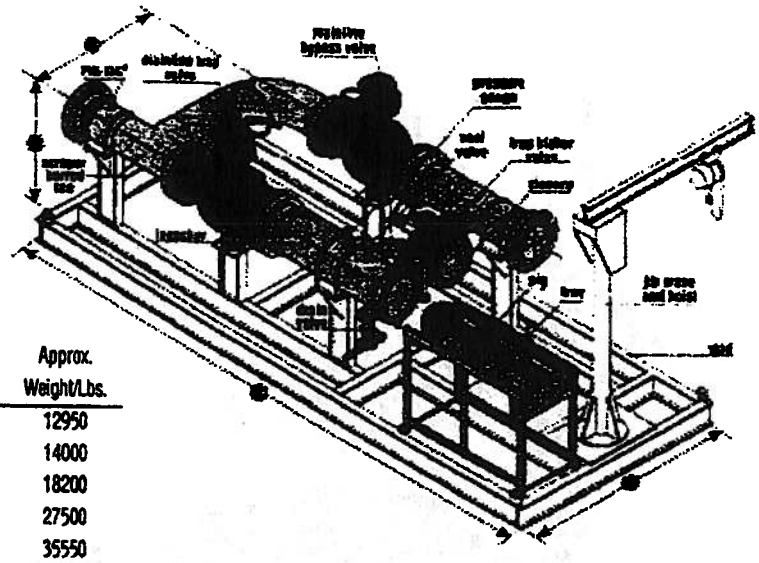

Pig Launching

Size	C	H	L	W	Approx. Weight/Lbs.
12" x 16"	3' 8"	3' 0"	21'10"	6'0"	12950
14" x 18"	3'10"	3'2"	22'4"	6'4"	14000
16" x 20"	4'0"	3'2"	23'8"	6'8"	18200
20" x 24"	5'0"	5'2"	26'7"	8'4"	27500
24" x 28"	5'11"	5'6"	31'0"	9'6"	35550
30" x 34"	6'11"	5'10"	38'4"	11'4"	52500
36" x 40"	7'8"	6'5"	45'8"	12'4"	76300
40" x 44"	8'0"	7'7"	50'1"	13'0"	107660

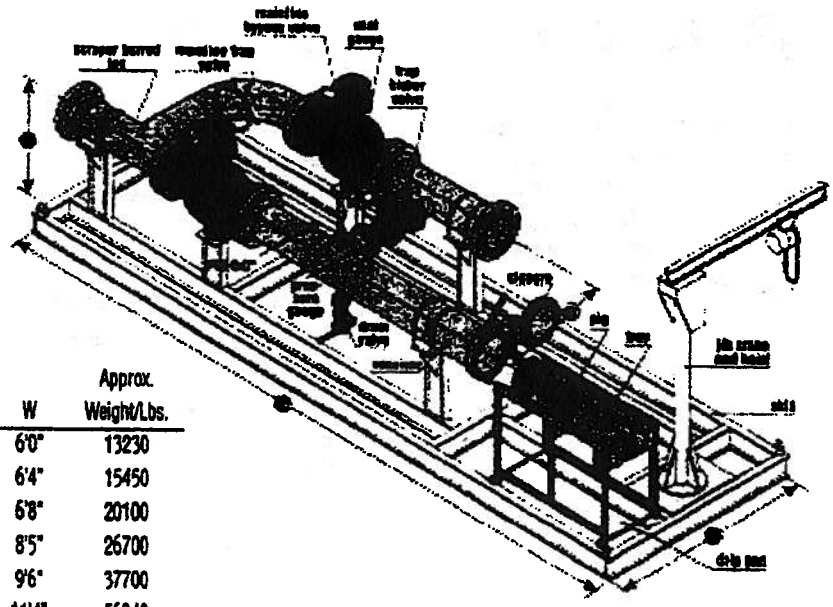

Pig Receiving

Size	C	H	L	W	Approx. Weight/Lbs.
12" x 16"	3'8"	3'0"	26'11"	6'0"	13230
14" x 18"	3'10"	3'2"	27'4"	6'4"	15450
16" x 20"	4'0"	3'2"	27'6"	6'8"	20100
20" x 24"	5'0"	5'2"	31'3"	8'5"	26700
24" x 28"	5'11"	5'6"	36'0"	9'6"	37700
30" x 34"	6'11"	5'10"	45'10"	11'4"	56340
36" x 40"	7'8"	6'5"	55'7"	12'4"	82200
40" x 44"	8'0"	7'7"	61'6"	13'0"	115350

T.D. Williamson, Inc. ■ P.O. Box 3409 ■ Tulsa, Oklahoma 74101-3409 ■ 918-447-5100 ■ Fax: 918-446-6327 ■ www.tdwilliamson.com

Dimensions and Part Numbers

T. D. Williamson, Inc.

Complete Pig Launching and Receiving Systems

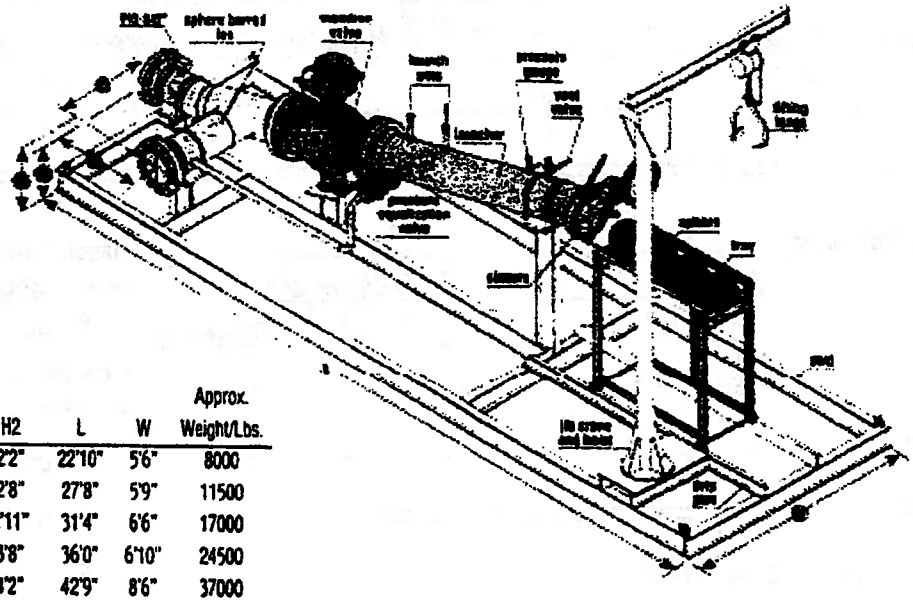

Sphere Launching

Size	C1	C2	H1	H2	L	W	Approx. Weight/Lbs.
12" x 14"	3'6"	3'8"	2'0"	2'2"	22'10"	5'6"	8000
16" x 18"	3'9"	4'2"	2'6"	2'8"	27'8"	5'9"	11500
20" x 22"	4'0"	3'8"	2'10"	2'11"	31'4"	6'6"	17000
24" x 26"	4'4"	4'2"	3'6"	3'8"	36'0"	6'10"	24500
30" x 32"	4'8"	4'7"	4'0"	4'2"	42'9"	8'6"	37000
36" x 40"	5'3"	5'11"	4'9"	5'0"	51'3"	9'8"	65500

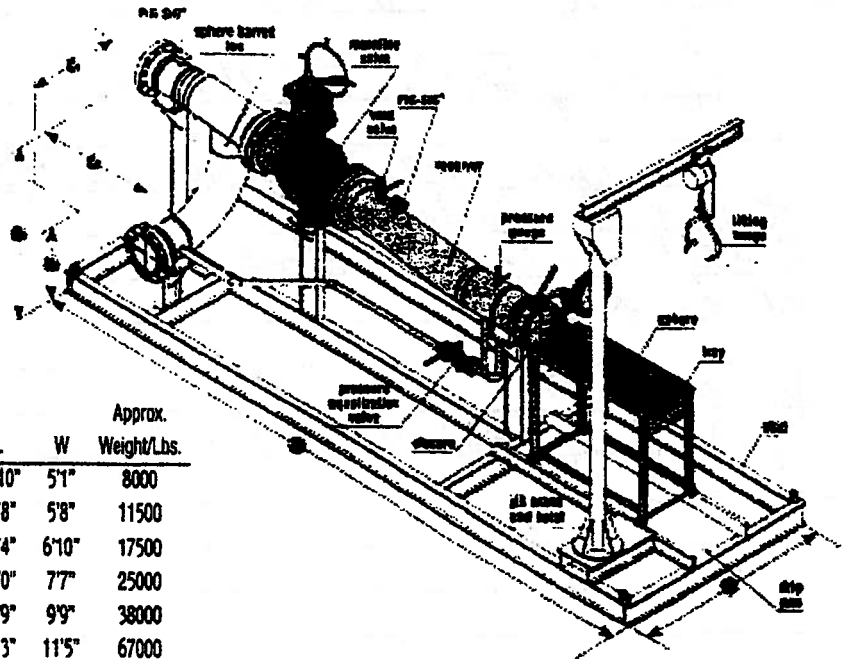

Sphere Receiving

Size	C1	C2	H1	H2	L	W	Approx. Weight/Lbs.
12" x 14"	3'0"	3'8"	4'1"	1'8"	22'10"	5'1"	8000
16" x 18"	3'7"	4'2"	5'11"	1'11"	27'8"	5'8"	11500
20" x 22"	4'4"	3'8"	6'3"	2'4"	31'4"	6'10"	17500
24" x 26"	5'0"	4'2"	7'4"	2'9"	36'0"	7'7"	25000
30" x 32"	5'11"	4'7"	8'10"	3'0"	42'9"	9'9"	38000
36" x 40"	7'0"	5'11"	10'6"	3'7"	51'3"	11'5"	67000

T.D. Williamson, Inc. ■ P.O. Box 3409 ■ Tulsa, Oklahoma 74101-3409 ■ 918-447-5100 ■ Fax: 918-446-6327 ■ www.tdwilliamson.com

BPXA-CEC00010811

VECO ENGINEERING

CLIENT FILE #

TELEPHONE & CONVERSATION REPORT

PROJECT Install GPB Pig L/R Facil. PROJECT NO. 125698-3903

SUBJECT Pig Launcher/Receiver Equipment

BY Rod Wedge DATE 3/6/03 PAGE 1 OF 3

INDIVIDUAL(S) PRESENT: Wedge, VECO; Jeff Simpson, T.D. Williamson

DIRECT CONVERSATION

PHONE CONVERSATION ✓

PHONE (918) 447-5100 (GEN.)

INCOMING

OUTGOING 3/6/03 AM PM ~10:30A

LOCATION

FORMAL LETTER TO FOLLOW ☐ YES ☒ NO

CONVERSATION NOTES:

Jeff is the sales rep. who quotes pigging equipment.

He requested I e-mail info.

"Jeff.Simpson@TDWilliamson.com"

TDW uses 150# Class as it's standard design

250# could be done as non-standard

ATTACHED:

Copy of follow-up e-mail

COST/ SCHEDULE IMPACT	ACTION BY	ACTION DATE
N/A	RDW	3/6/03

COPIES ~~TRM/Title~~ Report Apdx.

FORM NO. 17.01 - 9/94

BPXA-CEC00010812

Wedge, Rodney F.

From: Wedge, Rodney F.
Sent: Thursday, March 06, 2003 11:21 AM
To: Simpson Jeff (TDW) (E-mail)
Cc: Diamond, Jim E.
Subject: Pig Launcher/Receiver Equipment

Jeff:

Thanks for talking with me about the ROM budget work I am doing for BP at Prudhoe Bay regarding pig launcher and receiver facilities. As I said, this is in the earliest stages of the project budget process, so I am looking for approximations/rough budget numbers and any suggestions you may have regarding equipment options.

I am attaching an MS Excel sheet with several tables. The top table is my first cut tally of the line sizes and pressure classes we are asked to consider. There are 71 lines on the list, and each may need a pig launcher and receiver (142 potential assemblies). Permanently installed facilities would be represented by my "Option 1."

We are also looking at the possibility of making up portable launcher and receiver skids (Options 2 & 3) that would serve several pressure class lines by use of adapter pups at the isolation valves. The second table from the top of the sheet indicates the number of size/class PAIRS (launcher & receiver) that I've assumed. If you think it would be smarter to use a standard Class 1500 assembly in the case of the 12-inch and the 24-inch, feel free to comment.

Please let me know if you have any problem with the file attachment.

We appreciate your input at this early stage.

Thanks

Rod

R. F. (Rod) Wedge, P.E.
Sr. Project Engineer
VECO Alaska, Inc.
Tel.: 907-762-1766, FAX 762-1631

TDWmson_Ref.xls

Approximate Distribution by Nominal Pipe Size and Line Class - Option 1

NP Size:	8	12	14	16	18	20	24	30	34
Class:									
600							18	2	1
900			1	8	4	1	5		
1500		22		3			1		
2500	3	1					1		

Launcher & Receiver Unit Pairs Assumed Necessary - Options 2 & 3

by Size and Rating

NP Size:	8	12	14	16	18	20	24	30	34
Class:									
600							(Use 2500)	1	1
900			1	(Use 1500)	1	1	(Use 2500)		
1500		(Use 2500)		1			(Use 2500)		
2500	1	1					1		

Notes:
1) It is assumed that flanged adapter pups could be utilized on the skid-to-isolation-valve connections.
2) Isolation valve sets would be required for the line class rating in each use.
3) Total pig barrel units assumed = 18 (9 launcher units & 9 receiver units).

Approximate Count - Mainline Thru-conduit Valves - Option 1

by Size and Rating (2 each site x 2 sites/line)

NP Size:	8	12	14	16	18	20	24	30	34
Class:									
600							72	8	4
900			4	32	16	4	20		
1500		88		12			4		
2500	12	4					4		

Approximate Count - Fixed, Mainline Thru-conduit Valves - Option 2/3

by Size and Rating (1 each site x 2 sites/line)

NP Size:	8	12	14	16	18	20	24	30	34
Class:									
600							36	4	2
900			2	16	8	2	10		
1500		44		6			2		
2500	6	2					2		

Approx. Count - Movable, Mainline Thru-conduit Valves - Option 2/3

by Size and Rating (1 each launcher/receiver skid or set-up)

NP Size:	8	12	14	16	18	20	24	30	34
Class:									
600							2	2	2
900			2	2	2	2	2		
1500		2		2			2		
2500	2	2					2		

Wedge, Rodney F.

From: Wedge, Rodney F.
Sent: Tuesday, March 11, 2003 10:04 AM
To: Diamond, Jim E.
Subject: T. D. Williamson ROMs on Hot Tap Equipment

Jim:

The following was from Mr. Bill Walker, T. D. Williamson, Tulsa, OK, 918-447-5100.

Hot Tap Machines - ROM only...

Model 660 (up to 12-inch in ANSI 600 rating) - approximately $30,000 +/-, 111" tall, >400 lbs. (I've rounded up the figures he gave me for "bare-bones" machines).

Model 1200 (12"+, ANSI 600 rating) - approximately $200,000, 195" long, 5540 lbs.

Model 936 (12" - 36", ANSI 600/1440 psig) - approximately $300,000 +/-, including machine skid, diesel engine-driven power unit, but no cutters; 231" long, 6000 lbs.

He suggests considering use of their T. D. Williamson Service Center, Signal Hill, CA. Contact there is Mr. Brent Solomon, 562-986-5741.

Rod

R. F. (Rod) Wedge, P.E.
Sr. Project Engineer
VECO Alaska, Inc.
Tel.: 907-762-1766, FAX 762-1631

BPXA-CEC00010815

Wedge, Rodney F.

From: Pine, Tim K (BP)
Sent: Tuesday, March 11, 2003 3:39 PM
To: Wedge, Rodney F.
Subject: FW: Lines for Launchers Recv 2-25 ii.xls

Lines for Launchers Recv 2-25...

Rod,
Here is the date of last pigging if that information is of help to you.

Tim

-----Original Message-----
From: Sprague, Kip P
Sent: Tuesday, March 11, 2003 3:18 PM
To: Pine, Tim K
Subject: Lines for Launchers Recv 2-25 ii.xls

<<Lines for Launchers Recv 2-25 ii.xls>>

Spule ID	Spule Type	Size	Hydraulic Length	Nom WT	Design / Derate PSI	Material Grade	Serv	mBeta % Wall Loss	mAlpha Rate mpy	--Remaining WT	--% Wall T	MAOP	--Corrosion Depth	Est. Year of Replacement 2002	Priority	Last S-Rig Date
16C/17C	CL	24	19000	0.375	650	65000	PRF	0.3185	0.2939	26%	32%	1296	12%	2050+	1	1992
PTMCL501	CL	24	16700	0.375	900	65000	PRF	0.2657	1.0000	38%	27%	1364	10%	2050+	1	
16C	CL	24	11300	0.281	650	65000	PRF	0.2500	0.2697	31%	25%	1032	7%	2050+	1	1990
09A	CL	24	15942	0.375	708	65000	PRF	0.2357	0.3207	29%	24%	1402	9%	2050+	1	1994
04C	CL	24	7299	0.281	708	65000	PRF	0.2354	0.1418	21%	24%	1046	7%	2049	1	1992
12C	CL	24	18769	0.281	720	65000	PRF	0.2307	0.8438	22%	23%	1050	6%	2048	1	1994
16D	CL	16	25877	0.312	720	65000	PRF	0.2039	0.2827	25%	20%	1785	6%	2050+	1	1994
14B/14C	CL	24	6680	0.281	500	65000	PRF	0.2037	0.5843	22%	20%	1076	6%	2050+	1	1991
04C/13B	CL	24	10000	0.281	500	65000	PRF	0.2015	0.0382	22%	20%	1078	6%	2050+	1	1991
06C	CL	24	915	0.281	500	65000	PRF	0.2000	0.0000	22%	20%	1080	6%	2050+	1	
09B	CL	16	16239	0.625	792	56000	PRF	0.1909	0.7229	51%	19%	3211	12%	2050+	1	1994
17D	CL	16	25681	0.312	1100	65000	PRF	0.1899	0.1887	25%	19%	1807	6%	2050+	1	1992
01C	CL	20	6800	0.375	740	65000	PRF	0.1880	0.7952	30%	19%	1750	7%	2050+	1	
12B	CL	16	17982	0.344	891	56000	PRF	0.1840	0.0000	28%	18%	1765	6%	2050+	1	1991
17C	CL	24	12845	0.281	650	65000	PRF	0.1797	0.0700	23%	18%	1089	5%	2050+	1	1992
03D	CL	16	15354	0.344	850	56000	PRF	0.1775	0.0000	28%	18%	1775	6%	2050+	1	1994
14D	CL	12.75	7200	0.406	930	56000	PRF	0.1707	0.0121	34%	17%	2643	7%	2050+	1	1991
07B	CL	12.75	3106	0.406	1440	56000	PRF	0.1697	0.0000	34%	17%	2645	7%	2050+	1	
02D	CL	12.75	8739	0.406	1440	56000	PRF	0.1690	0.0000	34%	17%	2647	7%	2050+	1	
11A	CL	24	2206	0.25	740	65000	PRF	0.1667	0.0000	21%	17%	988	4%	2050+	1	
06B	CL	12.75	10528	0.406	1440	56000	PRF	0.1625	0.0000	34%	16%	2661	7%	2050+	1	
13B	CL	24	11200	0.281	900	65000	PRF	0.1621	0.0000	24%	16%	1116	5%	2050+	1	1992
07D	CL	12.75	5106	0.406	1440	56000	PRF	0.1614	0.0000	34%	16%	2664	7%	2050+	1	
13D	CL	12.75	21984	0.406	1100	56000	PRF	0.1593	0.0815	34%	16%	2668	6%	2050+	1	
04D	CL	12.75	50	0.406	708	56000	PRF	0.1550	1.5789	34%	16%	2679	6%	2050+	1	
11D	CL	16	2264	0.312	1300	65000	PRF	0.1545	0.4049	36%	15%	1864	5%	2050+	1	1989
02B	CL	12.75	6739	0.406	1440	56000	PRF	0.1538	0.0000	34%	15%	2681	6%	2050+	1	
PTMCL50102	CL	24	6800	0.375	900	65000	PRF	0.1390	0.3261	32%	14%	1571	5%	2050+	1	
08D	CL	12.75	10528	0.406	1440	56000	PRF	0.1379	0.0000	35%	14%	2718	6%	2050+	2	
02D/02E	CL	12.75	500	0.406	1440	56000	PRF	0.1333	0.2632	35%	13%	2728	5%	2050+	2	
11B	CL	12.75	2139	0.375	2160	65000	PRF	0.1174	0.7143	33%	12%	2888	4%	2050+	2	
01B	CL	12.75	7091	0.406	1440	56000	PRF	0.1111	0.1042	36%	11%	2778	5%	2050+	2	
TLGC3/PS3	FL	24	22704	1	1440	65000	OIL	0.1053	0.8288	89%	11%	4197	11%	2050+	2	
18D	CL	16	18400	0.312	1440	65000	PRF	0.1043	0.0000	28%	10%	1943	3%	2050+	2	
18B	CL	12.75	18166	0.375	2160	65000	PRF	0.1041	0.0000	34%	10%	2831	4%	2050+	2	
01D	CL	16	7098	0.344	1440	56000	PRF	0.1000	0.0000	31%	10%	1894	3%	2050+	2	
04B	CL	12.75	7565	0.406	1440	56000	PRF	0.1000	0.0000	37%	10%	2803	4%	2050+	2	
05B	CL	12.75	5795	0.406	1440	56000	PRF	0.1000	0.0000	37%	10%	2803	4%	2050+	2	
08E	CL	24	16340	0.375	720	65000	PRF	0.0149	0.3875	37%	2%	1670	1%	2050+	3	1994
PS3/TJE-30	CL	30	1544	0.344	550	60000	OIL	0.0133	0.0000	34%	1%	1145	0%	2050+	2	
15D	CL	16	18082	0.312	1440	65000	PRF	0.0127	0.0000	31%	1%	2086	0%	2050+	3	
05E	CL	8.625	6000	0.438	3600	56000	PRF	0.0109	0.1724	49%	1%	4786	0%	2050+	3	
18B	CL	12.75	18560	0.375	1050	65000	PRF	0.0106	0.0000	37%	1%	3151	0%	2050+	3	
PS3/ALPS-34	CL	24	25826	0.344	550	60000	OIL	0.0100	0.0000	34%	1%	1013	0%	2050+	2	
07C/13C	CL	24	4200	0.281	750	65000	PRF	0.0086	0.0000	28%	1%	1257	0%	2050+	3	
02C	CL	24	8678	0.281	720	65000	PRF	0.0083	0.0000	28%	1%	1257	0%	2050+	3	
07C	CL	24	633	0.281	750	65000	PRF	0.0075	0.0000	28%	1%	1258	0%	2050+	3	
LS02	CL	14	7300	0.281	900	65000	PRF	0.0070	0.0000	28%	1%	2156	0%	2050+	3	
15C	CL	24	17982	0.281	720	65000	PRF	0.0070	0.0000	28%	1%	1258	0%	2050+	3	1992
PS3/PS10L	CL	30	15279	0.344	550	60000	OIL	0.0054	0.0000	34%	1%	1151	0%	2050+	2	
03D	CL	12.75	5795	0.406	1440	56000	PRF	0.0053	0.0000	40%	1%	3014	0%	2050+	3	
03A	CL	24	70	0.344	650	65000	PRF	0.0043	0.0000	34%	0%	1543	0%	2050+	3	
06E	CL	12.75	3100	0.375	1440	65000	PRF	0.0027	0.0000	37%	0%	3170	0%	2050+	3	
LS04/05	CL	24	17200	0.375	900	65000	PRF	0.0022	0.0000	37%	0%	1685	0%	2050+	3	
LPC OIL SALES	CL	16	32500	0.342	1250	65000	PRF	0.0017	0.0000	34%	0%	2305	0%	2050+	2	
LS05	CL	18	18900	0.312	900	65000	PRF	0.0015	0.0000	31%	0%	1870	0%	2050+	3	
LS03	CL	18	16900	0.312	900	65000	PRF	0.0014	0.0000	31%	0%	1870	0%	2050+	3	
02E	CL	16	8818	0.375	1440	65000	PRF	0.0009	0.0000	37%	0%	2529	0%	2050+	3	
LS04	CL	18	14500	0.312	900	65000	PRF	0.0007	0.0000	31%	0%	1871	0%	2050+	3	
TLPS3/PS3	CL	24	21000	0.5	1440	65000	PRF	0.0000	0.0000	50%	0%	2250	0%	2050+	2	
03-AL	CL	12.75	7073	0.406	2160	56000	GAS	0.0000	0.0000	41%	0%	3026	0%	2050+	3	
03-AL	CL	12.75	15354	0.406	2160	56000	GAS	0.0000	0.0000	41%	0%	3026	0%	2050+	3	
03C	CL	24	14534	0.281	708	65000	PRF	0.0000	0.0000	28%	0%	1264	0%	2050+	3	1989
03-AL	CL	12.75	16239	0.406	2160	56000	GAS	0.0000	0.0000	41%	0%	3026	0%	2050+	3	
CLBK	CL	18	23900	0.312	900	65000	PRF	0.0000	0.0000	31%	0%	1872	0%	2050+	3	
LS01	CL	12.75	150	0.277	900	65000	PRF	0.0000	0.0000	28%	0%	2346	0%	2050+	3	
LS02THW	CL	8.625	1494	0.5	3280	65000	PRF	0.0000	0.0000	50%	0%	6260	0%	2050+	3	
LS02THW	CL	8.625	930	0.5	3280	65000	PRF	0.0000	0.0000	50%	0%	6260	0%	2050+	3	
NPWB-12	CL	12.75		0.75	3600	52000	OIL	0.0000	0.0000	75%	0%	5251	0%	2050+	3	
PTMC	CL	24	23250	0.25	900	65000	PRF	0.0000	0.0000	25%	0%	1125	0%	2050+	3	
PTMCB2	CL	24	5280	0.375	900	65000	OIL	0.0000	0.0000	37%	0%	1687	0%	2050+	3	

Diamond, Jim E.

From: Wedge, Rodney F.
Sent: Tuesday, March 11, 2003 4:19 PM
To: Diamond, Jim E.
Subject: FW: Portable LB/RB's

ONLY 1 OR 2 OF THESE ARE SUITABLE FOR THE EOA NEEDS.

FYI

-----Original Message-----
From: Pine, Tim K (BP)
Sent: Tuesday, March 11, 2003 3:42 PM
To: Wedge, Rodney F.
Subject: FW: Portable LB/RB's

Rod,
Additional Information for your estimate.

Tim

> -----Original Message-----
> From: Matthews, Lonnie T
> Sent: Monday, March 10, 2003 5:02 PM
> To: Pine, Tim K
> Subject: FW: Portable LB/RB's
>
>
>
> -----Original Message-----
> From: GPB, Pigging Operators
> Sent: Thursday, October 10, 2002 10:33 AM
> To: NSU, CIC Mech Integrity Insp
> Subject: RE: Portable LB/RB's
>
> Lonnie,
> I added the only one they have at MPU to the list below, a 14" 600# still
> waiting to here back from END.
>
> Chris
>
> -----Original Message-----
> From: NSU, CIC Mech Integrity Insp
> Sent: Thursday, October 10, 2002 9:53 AM
> To: GPB, Pigging Operators
> Cc: NSU, CIC Mech Integrity Insp
> Subject: FW: Portable LB/RB's
>
> Chris,
> Could you please let me know if you are aware of any portable launchers or
> receivers in addition to this listing. It does not appear that we have a
> 12" x 16" 1500# ANSI that we could use at L/U or Y pad while waiting for
> a new receiver. It may be worthwhile incorporating any portable s at Milne
> and Endicott if any to this listing such that we have a consolidated
> listing.
>
> Thanks,
>
> Lonnie T. Matthews
> 659-5664 Phone
> 659-5100 #1459 Pager
> 659-5152 Fax
>
> -----Original Message-----

> From: NSU, CIC Mech Integrity Insp
> Sent: Monday, February 25, 2002 7:07 AM
> To: NSU, CIC Mech Integrity Insp; NSU, CIC TL; NSU, CIC Fld Integ Ops
> Subject: FW: Portable LB/RB's
>

Fyi on piggies

> Thanks,
>
> Lonnie T. Matthews
> 659-5664 Phone
> 659-5100 #1459 Pager
> 659-5152 Fax
>
> -----Original Message-----
> From: PBU, CIC Mechanical Integrity Inspector
> Sent: Monday, November 20, 2000 6:11 PM
> To: Phillips, John D
> Cc: VECO Maint Field Supv PRB (Phillips); PBU, CIC Mechanical Integrity
> Inspector
> Subject: RE: Portable LB/RB's
>
> John,
> Here is a listing of what I was able to locate.
>

Quantity	Diameter	ANSI Rating	Design Pressure	Comments
2	20"	600#	1480 psi	Flanged Assembly
1	20"	1500#	3705 psi	[illegible] End
1	16"	1500#	3705 psi	[illegible] End
1	14"	[illegible]	3470 psi	[illegible] End

> These launchers are currently staged outside North of the EOA fuel docks
> at the old hog barn location. There are many spools, valves, pigs, and
> assorted pig parts also staged here. No attempt was made to inventory
> these items as this area is currently blown in.
>
> Kevin,
> If you know of any additional pigging launchers/ receivers or additional
> staging locations please advise.
>
> Thanks,
>
> Lonnie
> 659-5664
>
> -----Original Message-----
> From: Phillips, John D
> Sent: Saturday, November 18, 2000 3:19 PM
> To: PBU, CIC ASCG Inspector (Denardi/Sprague); Barnes,
> Randall L (PAI); Gahr, Michael C (PAI); PBU, CIC OU Inspector; PBU, CIC
> Mechanical Integrity Inspector
> Cc: PBU, Pigging Operators
> Subject: FW: Portable LB/RB's
>
>
> Gents,
>
> Here's a listing of the portable pig launchers/receivers
> available on the WOA for use in planning a pigging program for the EOA.
>
> Lonnie: Can you track down any similar equipment that may be
> available on the EOA?
>
> Thanks,
> John
>
> -----Original Message-----
> From: PBU, Pigging Operators

> Sent: Tuesday, November 14, 2000 6:20 PM
> To: PBU, CIC NS TL Felix/Phillips
> Subject: Portable LB/RB's
>
> John,

To answer the question you left on phone mail;

> Below is a list of portables we have.
> 1 ea. 14" 600# ANSI
> 2 ea. 24" 300# ANSI
> 1 ea 24" 600# ANSI
> 2 ea. 6" 1500# ANSI
> 2 ea. 4" 1500# ANSI
> 1 ea. 10" 1500# ANSI
> 1 ea. 18" 300# ANSI ????? Will have to verify the 18"
> 300# tomorrow. I believe this is the one they were going to use on P-LDF.
>
> Hope this helps,
> Doug
> Doug Vaughn
> PBU/WOA Pigging Operator
> * 907-659-4682
> * vaughnmd@bp.com
>